EXTERIOR RENDERING

design matters

somerville
architects | engineers

Somerville Inc. | 2100 Riverside Drive, Green Bay, WI 54301-2390
P 920.437.8136 | F 920.437.1131 | www.somervilleinc.com

Revisions	Description	Date

This drawing may not be reproduced without the written permission of Somerville, Inc.
Permission or copies of this drawing may be obtained by emailing:
Planroquest@somervilleinc.com
© Somerville, Inc. 2016

PROPOSED ADDITION AND REMODEL
CEREBRAL PALSY, INC.
GREEN BAY, WISCONSIN

Date:
03/14/17
Project No.
6450
Sheet:
RND1

3/13/2017 9:22:48 AM

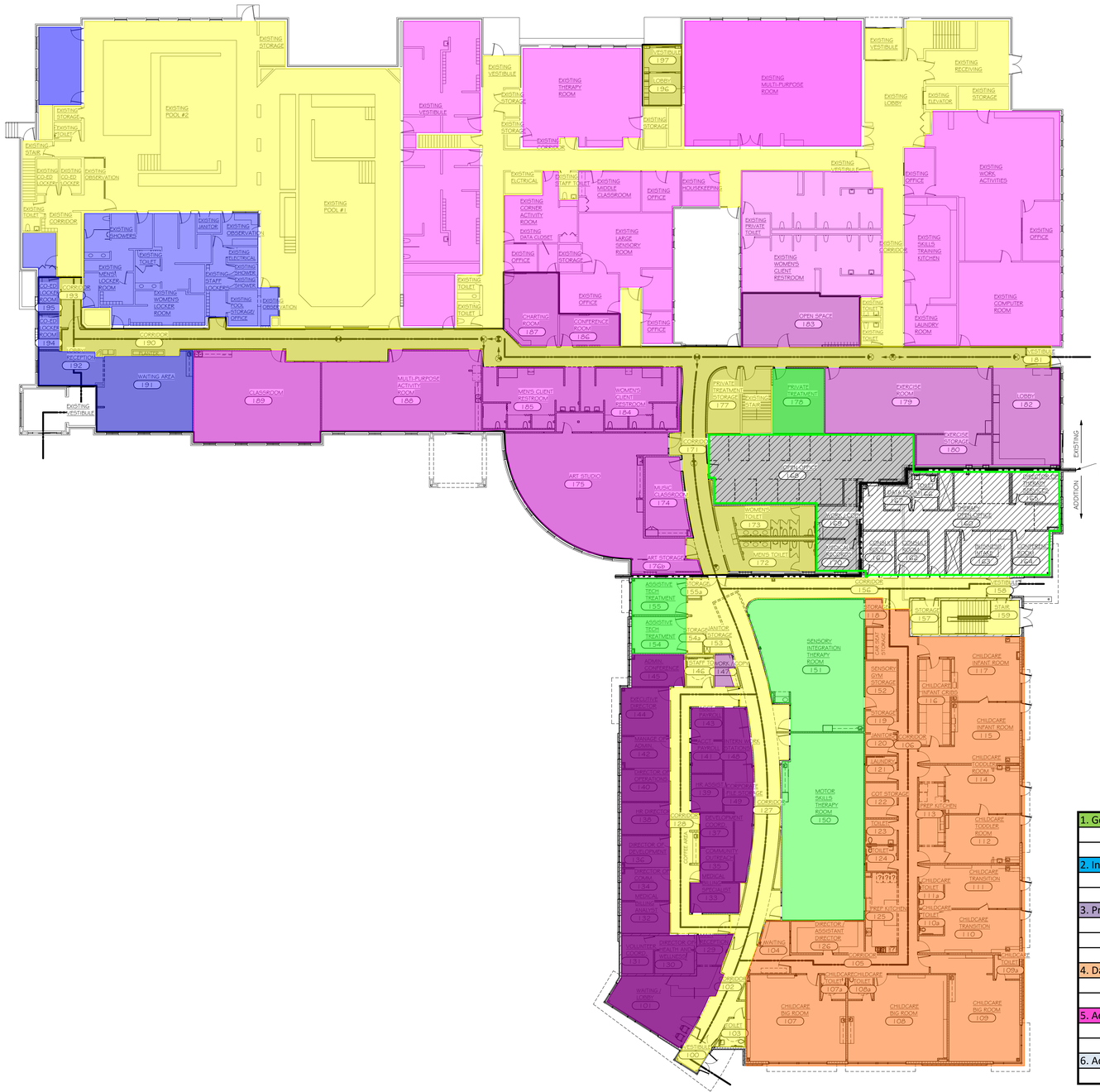

LIFE SAFETY PLAN / COMPOSITE FIRST FLOOR PLAN

SCALE: 1/16" = 1'-0"

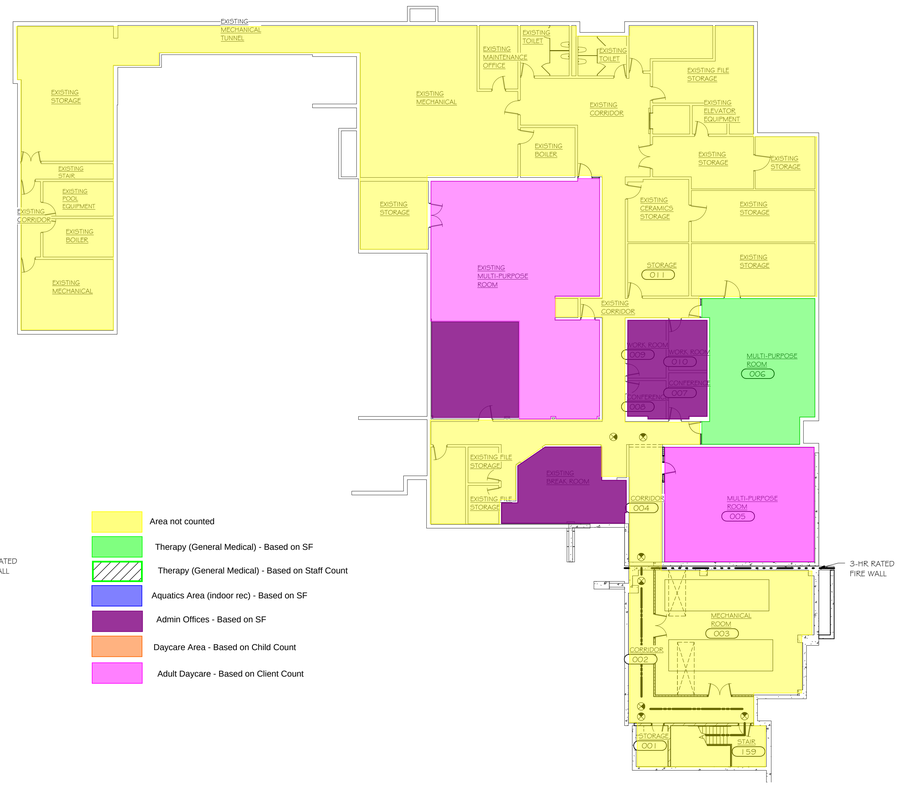

LIFE SAFETY PLAN / BASEMENT FLOOR PLAN

SCALE: 1/16" = 1'-0"

	Notes	1st floor	Lower Level	stalls needed	drop-off Que
1. General Medical (therapy services / treatment rooms)					
1.5 stalls per 200 sf	--	3448	1038	33.65	--
1 stall per employee on shift	assuming worst case	22	na	22.00	--
2. Indoor Rec (aqautics lobby, lockers, pool deck)					
1 stall per 250 sf	--	3338	na	13.35	--
1 stall per employee on shift	assuming worst case	8	na	8.00	--
3. Professional Offices					
1 stall per 200 sf for the first 8,000 sf	--	3063	1594	23.29	--
1 stall per 700 sf for the next 12,000 sf	--	na	na	--	--
1 stall per 1000 sf above 12,000 sf	--	na	na	--	--
4. Daycare Center					
1 stall per 10 children	licensed for	92	na	9.20	--
1 que per 20 children (2 min)	licensed for	92	na	--	4.60
5. Adult Daycare					
1 stall per 8 clients	assuming worst case	134	na	16.75	--
1 que per 20 clients (2 min)	assuming worst case	134	na	--	6.70
6. Additional Stalls Required per Item 29					
50,001 to 150,000 GSF	--	67076	18794	1.00	--
			Total:	127.232	11.3
			Required:	**128**	**12**

Square foot numbers in items 1 through 5 above do not include corridor areas, restroom areas, or utility / storage areas.

Original Owner Supplied Parking Study

Date:	**7/7**	**7/8**	**7/9**	**7/10**	**7/11**	**7/14**	**7/15**	**7/16**	**7/17**	**7/18**
# of cars in a.m.	*105	101	90	109	93	104	119	100	91	83
# of cars in p.m.	106	92	97	97	N/A	84	97	104	N/A	*78
# of Aquatics Visits	150	112	142	120	73	134	124	138	127	73

* Count done around noon
a.m. counts done between 9:00 & 9:30 / p.m. counts done between 3:00 & 3:15 unless otherwise noted

design matters.
somerville architects | engineers
Somerville Inc. | 2100 Riverside Drive, Green Bay, WI 54301-2390
P 920.437.8136 | F 920.437.1131 | www.somervilleinc.com

Revisions | Description | Date

This drawing may not be reproduced without the written permission of Somerville, Inc. This drawing is the property of Somerville, Inc. and may only be used on the project specified in our agreement with you. Permission must be obtained for any other use. Plansrequest@somervilleinc.com
© Somerville, Inc. 2016

PROPOSED ADDITION AND REMODEL
CEREBRAL PALSY, INC.
GREEN BAY, WISCONSIN

Date: 03/14/17
Project No. 6450
Sheet **A101**

PRELIMINARY
2/23/2017 7:05:14 AM

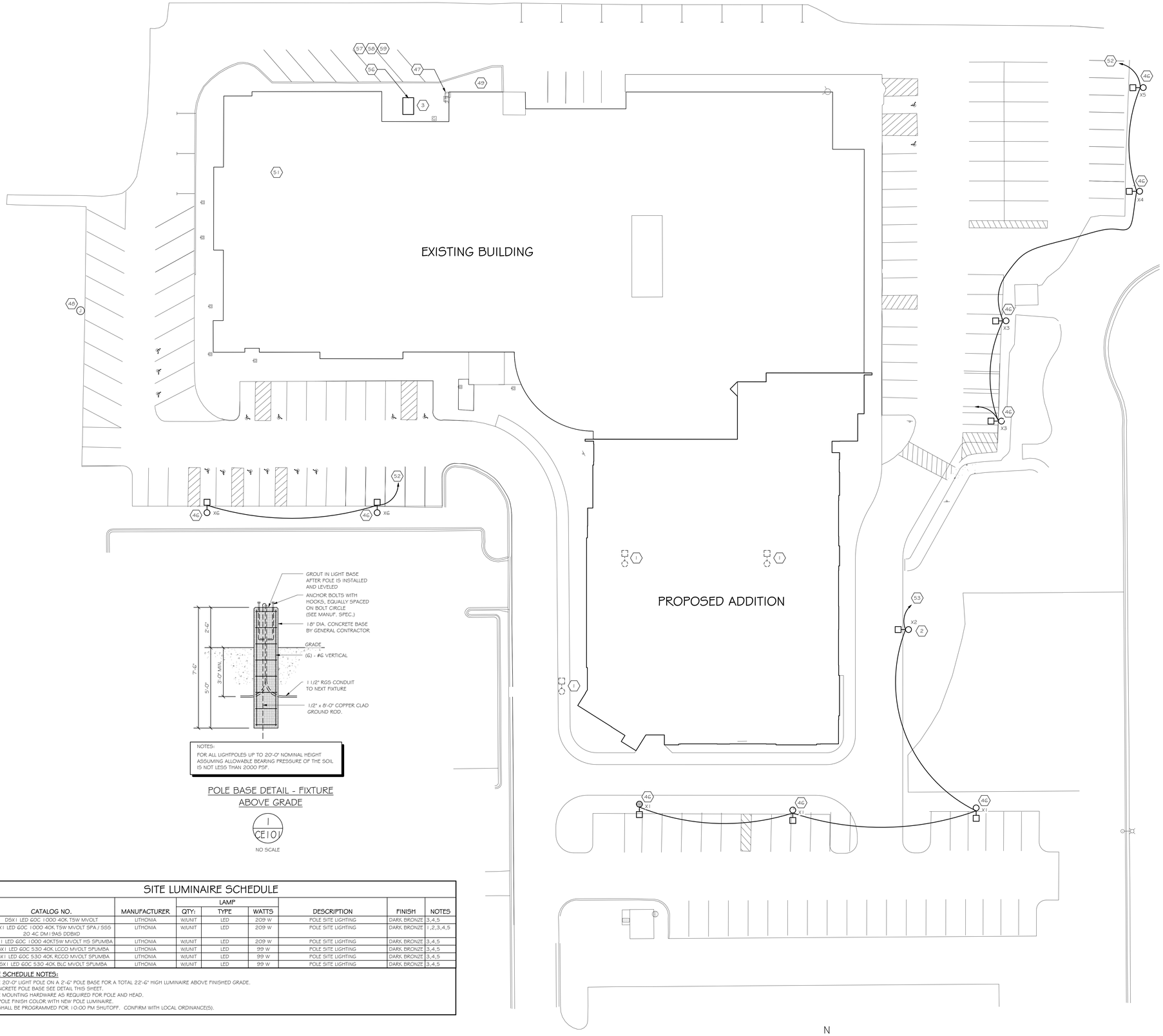

ELECTRICAL - SITE PLAN

SCALE: 1" = 20'-0"

N

NOTES:

FOR ALL LIGHTPOLES UP TO 20'-0" NOMINAL HEIGHT ASSUMING ALLOWABLE BEARING PRESSURE OF THE SOIL IS NOT LESS THAN 2000 PSF.

POLE BASE DETAIL - FIXTURE ABOVE GRADE

1 / CE101

NO SCALE

SITE LUMINAIRE SCHEDULE

TYPE	CATALOG NO.	MANUFACTURER	LAMP QTY:	LAMP TYPE	LAMP WATTS	DESCRIPTION	FINISH	NOTES
X1	DSX1 LED 60C 1000 40K T5W MVOLT	LITHONIA	W/UNIT	LED	209 W	POLE SITE LIGHTING	DARK BRONZE	3,4,5
X2	DSX1 LED 60C 1000 40K T5W MVOLT SPA / SSS 20 4C DM19AS DDBXD	LITHONIA	W/UNIT	LED	209 W	POLE SITE LIGHTING	DARK BRONZE	1,2,3,4,5
X3	DSX1 LED 60C 1000 40KT5W MVOLT HS SPUMBA	LITHONIA	W/UNIT	LED	209 W	POLE SITE LIGHTING	DARK BRONZE	3,4,5
X4	DSX1 LED 60C 530 40K LCCO MVOLT SPUMBA	LITHONIA	W/UNIT	LED	99 W	POLE SITE LIGHTING	DARK BRONZE	3,4,5
X5	DSX1 LED 60C 530 40K RCCO MVOLT SPUMBA	LITHONIA	W/UNIT	LED	99 W	POLE SITE LIGHTING	DARK BRONZE	3,4,5
XG	DSX1 LED 60C 530 40K BLC MVOLT SPUMBA	LITHONIA	W/UNIT	LED	99 W	POLE SITE LIGHTING	DARK BRONZE	3,4,5

LUMINAIRE SCHEDULE NOTES:

1. PROVIDE 20'-0" LIGHT POLE ON A 2'-6" POLE BASE FOR A TOTAL 22'-6" HIGH LUMINAIRE ABOVE FINISHED GRADE.
2. FOR CONCRETE POLE BASE SEE DETAIL THIS SHEET.
3. PROVIDE MOUNTING HARDWARE AS REQUIRED FOR POLE AND HEAD.
4. MATCH POLE FINISH COLOR WITH NEW POLE LUMINAIRE.
5. LIGHTS SHALL BE PROGRAMMED FOR 10:00 PM SHUTOFF. CONFIRM WITH LOCAL ORDINANCE(S).

PLAN NOTES:

1 SITE CLEAR EXISTING LIGHT POLE, HEAD, AND BASE. RETAIN LIGHT POLE AND CIRCUIT FOR REUSE.

2 PROVIDE NEW SITE LIGHT POLE BASE AND LUMINAIRE TYPE INDICATED. REUSE LIGHT POLE FROM DEMOLITION.

3 EXISTING PAD MOUNT UTILITY TRANSFORMER AND INCOMING ELECTRICAL SERVICE LOCATION. COORDINATE NEW SERVICE INSTALL REQUIREMENTS WITH LOCAL UTILITY AND PROVIDE ACCORDINGKLY. SEE SHEET E501 FOR ADDITIONAL INFORMATION.

46 RETROFIT EXISTING POLE WITH LUMINAIRE TYPE INDICATED.

47 SITE CLEAR ABANDONED ELECTRICAL ENCLOSURES ON BUILDING WALL AND ABANDONED UNDERGROUND CONDUITS. PATCH AS REQUIRED.

48 NEW SITE SIGNAGE. PROVIDE (1) 20A, 120V CIRCUIT FROM EXISTING PANEL 'N', AND ROUTE THROUGH NEW TIME CLOCK AND LIGHTING CONTACTOR, LOCATED IN WEST BASEMMENT. COORDINATE FINAL SIGN LOCATION.

49 COORDINATE LOCATION, QUANTITY, AND SIZES OF INCOMING INTERNET SERVICE PROVIDER CONDUITS AND INSTALLATION REQUIREMENTS WITH OWNER. PROVIDE CONDUITS AS REQUIRED.

51 -

52 CONNECT TO EXISITNG CIRCUIT AND CONTROL AND CONTROL METHOD. UPSIZE CONDUCTORS AND CONDUITSAS REQUIRED FOR VOLTAGE DROP. PROVIDE NEW CIRCUIT AS REQUIRED.

53 REUSE EXISTING CIRCUIT AND CONTROL METHOD FROM DEMOLITION. EXTEND NEW 120V CIRCUIT AND PROVIDE NEW LIGHTING CONTROL TO MATCH EXISTING METHOD. UPSIZE CONDUCTORS AND CONDUIT AS REQUIRED FOR VOLTAGE DROP.

56 ELECTRICAL CONTRACTOR SHALL PROVIDE BUT NOT LIMITED TO UTILITY APPROVED TRANSFORMER PAD, METER SOCKET, CURRENT TRANSFORMER ENCLOSURE, AND ALL CONNECTING CONDUIT. REFER TO UTILITY'S APPROVED EQUIPMENT LIST. COORDINATE WITH LOCAL UTILITY FOR EXACT REQUIREMENTS AND PROVIDE ACCORDINGLY.

57 PROVIDE A MINIMUM OF TWO (2) 5/8" x 8' COPPERCLAD STEEL GROUND RODS WITH APPROVED CLAMPS FOR SERVICE ENTRANCE GROUND. TOP OF RODS SHALL BE AT LEAST 12" BELOW GRADE LEVEL. PROVIDE GROUNDING PER NEC 250, SERVICE ENTRANCE IN DEDICATED CONDUIT PER NEC REQUIREMENTS USING APPROVED CLAMPS.

58 ELECTRICAL CONTRACTOR SHALL PROVIDE SERVICE ENTRANCE CONDUCTORS AND MAKE FINAL TERMINATION ON SECONDARY SIDE OF UTILITY TRANSFORMER. ELECTRICAL CONTRACTOR SHALL PROVIDE SERVICE ENTRACNE CONDUCTORS AS SCHEDULED IN RIGID STEEL OF SCHEDULE 80 PVC CONDUIT. CONDUITS SHALL EXTEND A MINIMUM OF 18" BELOW FINISHED GRADE, AND SWEEPS SHALL NOT EXCEED MANUFACTURER'S RECOMMENDED BENDING RADIUS. UNDERGROUND CONDUIT SYSTEM SHALL BE WATERTIGHT.

59 PROVIDE GROUNDING AND BONDING OF SERVICE EQUIPMENT PER UTILITY REQUIREMENTS.

DEMOLITION GENERAL NOTES:

A. VERIFY EXISTING SITE CONDITIONS BEFORE BEGINNING DEMOLITION.
B. COORDINATE ALL DEMOLITION WORK WITH OTHER TRADES.
C. SITE CLEAR ALL ABANDONED CONDUIT AND WIRE FOUND IN THIS AREA OF REMODELING. REMOVE TO NEAREST SPLICE POINT OR ORIGIN.
D. ALL DEVICES THAT ARE NOT WITHIN THE SCOPE OF THIS DEMOLITION MUST HAVE THEIR CIRCUIT INTEGRITY MAINTAINED. EXTEND CIRCUITS AS REQUIRED TO ENSURE THAT ALL EQUIPMENT THAT IS REMAINING SHALL HAVE ADEQUATE POWER SUPPLIED.
E. THE ELECTRICAL CONTRACTOR SHALL ENSURE THAT ALL FIRE AND SMOKE RATINGS OF WALLS, FLOORS AND CEILINGS ARE MAINTAINED. IF THE INTEGRITY IS SACRIFICED THEY SHALL BE REPAIRED BACK TO THEIR ORIGINAL RATING. ALL PENETRATIONS SHALL BE PROPERLY SEALED.
F. THE ELECTRICAL CONTRACTOR SHALL REMOVE FACEPLATES AND ADJUST BOXES AND DEVICES TO ACCOMMODATE THE FURRING OUT OF EXISTING WALLS WHERE REQUIRED.
G. THE DEVICES SHOWN DASHED ON DEMOLITION PLANS AND ASSOCIATED ELECTRICAL EQUIPMENT ARE TO BE DISCONNECTED AND SITE CLEARED UNLESS OTHERWISE NOTED.
H. DISCONNECT AND SALVAGE ALL LIGHT FIXTURES IDENTIFIED TO BE DEMOLISHED AND RETURN TO OWNER, OR STORE FOR REUSE, ACCORDING TO PLAN NOTES.
I. THE ELECTRICAL CONTRACTOR SHALL SITE CLEAR ALL DEVICES, RACEWAYS AND BOXES IN WALLS BEING DEMOLISHED.
J. THESE DEMOLITION SHEETS ARE INTENDED AS A GUIDE. WHERE NEW CONSTRUCTION SHOWN ON LATER SHEETS IMPLIES OR REQUIRES THE DEMOLITION OF EXISTING CONSTRUCTION TO FACILITATE NEW INSTALLATIONS, THOSE ELEMENTS SHALL BE REMOVED REGARDLESS OF WHETHER OR NOT THEY ARE SPECIFICALLY SHOWN ON THESE SHEETS. DEVICES NOT SHOWN ON WALLS BEING DEMOLISHED ARE TO BE DEMOLISHED AND SITE CLEARED TO NEAREST SPLICE POINT OR POINT OF ORIGIN.
K. ALL EXISTING ELECTRICAL CIRCUITS ARE TO BE MAINTAINED FOR RECONNECTION. ANY CIRCUITS NOT RECONNECTED ARE TO BE SITE CLEARED TO POINT OF ORIGIN.
L. WORK CLOSELY WITH OTHER TRADES FOR PROJECT PHASING. ANY POWER INTERRUPTIONS MUST BE COORDINATED WITH THE OWNER.
M. REMOVE AND STORE ALL LIGHT FIXTURES THAT ARE REQUIRED BY OTHER TRADES TO BE REMOVED TO ALLOW OTHER TRADES SCOPE OF WORK TO BE COMPLETED. MAINTAIN CIRCUIT FOR REUSE.
N. ELECTRICAL CONTRACTOR TO DEMOLISH ALL ELECTRICAL TO MECHANICAL EQUIPMENT REQUIRED BY OTHER TRADES TO POINT OF ORIGIN. COORDINATE EXACT REQUIREMENTS WITH OTHER TRADES.
O. ELECTRICAL CONTRACTOR IS RESPONSIBLE FOR ALL TEMPORARY LIGHTING. MINIMUM N.E.C. AND OSHA REQUIRED FOOTCANDLES MUST BE MAINTAINED.
P. ELECTRICAL CONTRACTOR TO SITE CLEAR ANY AND ALL DISCONNECTED / ABANDONED CONDUIT, SWITCHES, PANELS, WIRE, INCLUDING COMMUNICATION / DATA CABLING FOUND IN THE FACILITY DURING CONSTRUCTION.

ELECTRICAL SITE SYMBOLS LIST

SYMBOL	DESCRIPTION
	PARKING LOT LUMINAIRE WITH POLE BASE
J	IN GRADE JUNCTION BOX

design matters.
somerville architects | engineers
Somerville Inc. | 2100 Riverside Drive, Green Bay, WI 54301-2390
P 920.437.8136 | F 920.437.1131 | www.somervilleinc.com

Revisions | Description | Date

This drawing may not be reproduced without the written permission of Somerville, Inc. Visual contact with these drawings shall constitute prima facie evidence of acceptance of these restrictions.
© Somerville, Inc. 2016

PROPOSED ADDITION AND REMODEL
CEREBRAL PALSY, INC.
GREEN BAY, WISCONSIN

Date: 03/14/17
Project No. 6450
Sheet **CE101**

PRELIMINARY
3/13/2017 2:13:53 PM

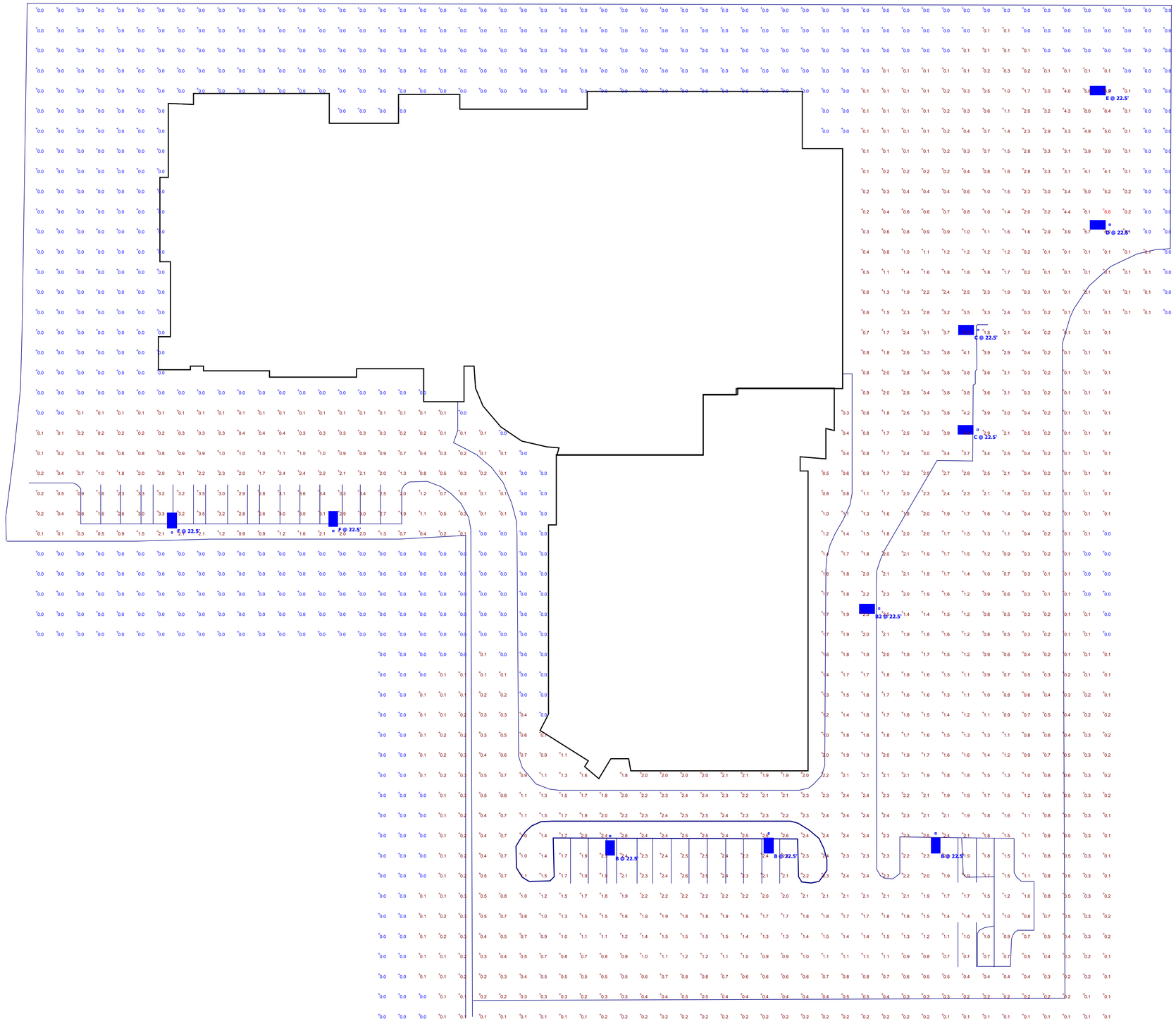

D-Series Size 1
LED Area Luminaire

d^series

Specifications

EPA:	1.01 ft² (.09m²)
Length:	33" (83.8cm)
Width:	13" (33.0cm)
Height:	7-1/2" (19.0cm)
Weight (max):	27 lbs (12.2kg)

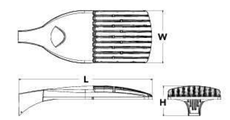

Catalog Number
Notes
Type

Introduction

The modern styling of the D-Series is striking yet unobtrusive - making a bold, progressive statement even as it blends seamlessly with its environment.

The D-Series distills the benefits of the latest in LED technology into a high performance, high efficacy, long-life luminaire. The outstanding photometric performance results in sites with excellent uniformity, greater pole spacing and lower power density. It is ideal for replacing 100 – 400W metal halide in pedestrian and area lighting applications with typical energy savings of 65% and expected service life of over 100,000 hours.

Ordering Information

EXAMPLE: DSX1 LED 60C 1000 40K T3M MVOLT SPA DDBXD

DSXTLED

Series	LEDs	Drive current	Color temperature	Distribution	Voltage	Mounting
DSX1 LED	**Forward optics** 30C 30 LEDs (one engine) 40C 40 LEDs (two engines) 60C 60 LEDs (two engines) **Rotated optics** [1] 60C 60 LEDs (two engines)	530 530 mA 700 700 mA 1000 1000 mA (1.A)†	30K 3000 K 40K 4000 K 50K 5000 K AMBPC Amber phosphor converted [2]	T1S Type I Short T2S Type II Short T2M Type II Medium T3S Type III Short T3M Type III Medium T4M Type IV Medium TFTM Forward Throw Medium T5WS Type V Wide Short T5S Type V Short T5M Type V Medium T5W Type V Wide BLC Backlight control [3] LCCO Left corner cutoff [3] RCCO Right corner cutoff [3]	MVOLT [4] 120 [4] 208 [4] 240 [4] 277 [4] 347 [4] 480 [4] **Shipped separately** KMA8 DDBXD U Mast arm mounting bracket adaptor (specify finish) [4]	**Shipped included** SPA Square pole mounting RPA Round pole mounting WBA Wall bracket SPUMBA Square pole universal mounting adaptor [5] RPUMBA Round pole universal mounting adaptor [5]

Control options		Other options	Finish (required)
Shipped installed PIR NEMA twist-lock receptacle only (no controls) [6] PIR5 Five-wire receptacle only (no controls) [6,9] PIR7 Seven-wire receptacle only (no controls) [6,9] DMG 0-10V dimming driver (no controls) [7] DCR Dimmable and controllable via ROAM® (no controls) [7] DS Dual switching [8,9] PIR Motion/ambient sensor, 8–15' mounting height, ambient sensor enabled at 5fc [10] PIRH Motion/ambient sensor, 15–30' mounting height, ambient sensor enabled at 5fc [9]	PIR1FC3V Motion/ambient sensor, 8–15' mounting height, ambient sensor enabled at 1fc [9] PIRH1FC3V Motion/ambient sensor, 15–30' mounting height, ambient sensor enabled at 1fc [9] BL30 Bi-level switched dimming, 30% [8,9] BL50 Bi-level switched dimming, 50% [8,9] PIRTD3 Part night, dim3 down [11] PIRT5D3 Part night, dim5 hrs [11] PIRT6D3 Part night, dim6 hrs [11] PIRT7D3 Part night, dim7 hrs [11]	**Shipped installed** HS House-side shield [9] WTB Utility terminal block [12] SF Single fuse (120, 277, 347V) [13] DF Double fuse (208, 240, 480V) [13] L90 Left-mounted optics [14] R90 Right-mounted optics [14]	DDBXD Dark bronze DBLXD Black DNAXD Natural aluminum DWHXD White DDBTXD Textured dark bronze DBLBXD Textured black DNATXD Textured natural aluminum DWHGXD Textured white

Controls & Shields

Accessories

DLL127 1.5 JU, DLL347 1.5 CEL JU, DLL480 1.5 CEL JU, DSHORT SBK U, DSX1HS 30CW, DSX1HS 40CW, DSX1HS 60CW, PUMBA DDBXD U, KMA8 DDBXD U

For more control options, visit DTC and ROAM® online.

NOTES

1. Rotated optics available with 40C only.
2. Not available AMBPC.
3. Not available with 530mA or 700mA.
4. Not available with AMBPC. 1.A (or 1000mA) or BL, C, LCCO or RCCO distribution.
5. MVOLT driver operates on any line voltage from 120-277V (50/60 Hz). Specify 120V, 208V, 240V or 277V options only when ordering with fusing (SF, DF options).
6. Not available with single board, 530mA product (30C/530 or 60C/530 DS). Not available with BL30, BL50 or PIRHT options.
7. Available as a separate combination accessory: PUMBA (finish) U; 1.5 G vibration rating per ANSI C136.31.
8. Must be ordered as a separate accessory; see Accessories information. For use with 2-3.8" mast arm (not included).
9. Photocell ordered and shipped as a separate line item from Acuity Brands Controls. See accessories. Not available with DS option.
10. If ROAM® node required, it must be ordered and shipped as a separate line item from Acuity Brands Controls. Not available with DCR.
11. Specify 5, 6 or 7 hours. Not available with DCR.
12. Specifies a ROAM® enabled luminaire with 0-10V dimming capability. PSIR option required. Additional hardware and services required for ROAM® deployment, must be purchased separately. Call 1.800.442.6745 or email sales@roamservices.net. Not with PIR options DS, PIR5, PIR7, BL30, BL50 or PIRHT options.
13. Requires 40C or 60C. Provides 50/50 luminaire operation via two independent circuits. Not available with PIR, PIR5, PIR7, PIRH, PIR1FC3V, PIRH1FC3V, BL30 or BL50.
14. Requires an additional switched circuit. Not available with DS, BL30 or BL50. Not available with PIR, PIR5, PIR7, PIRH, PIR1FC3V, PIRH1FC3V or DCR.
15. PIR and PIR1FC3V specify the Intermediate, SR2DR, HIGH/LOW/OFF control. PIRH and PIRH1FC3V specify the Intermediate, SR2DR, HIGH/OFF control, see Motion Sensor Modes for details. Dimming driver standard. Not available with PERS or PERT. Ambient sensor disabled when ordered with DCR. Separate unit of required.
16. Dimming driver standard. MVOLT only. Not available with 347V, 480V, DCR, DS, PERS, PERT, BL30 or BL50.
17. Dimming driver standard. MVOLT only. Not available with 347V, 480V, DCR, DS, PERS, PERT, BL30 or BL50.
18. Also available as a separate accessory; see Accessories information.
19. WTB not available with DS.
20. Single fuse (SF) requires 120V, 277V or 347V. Double fuse (DF) requires 208V, 240V or 480V.
21. Not available with HS (LEDs (60C option) only.
22. Requires luminaire to be specified with PIR option. Ordered and shipped as a separate line item from Acuity Brands Controls.

LITHONIA LIGHTING.
One Lithonia Way • Conyers, Georgia 30012 • Phone: 800.279.8041 • Fax: 770.918.1209 • www.lithonia.acuity.com
© 2011-2016 Acuity Brands Lighting, Inc. All rights reserved.

Schedule

Symbol	Label	Quantity	Manufacturer	Catalog Number	Description	Lumens Per Lamp	Light Loss Factor	Wattage
	B	3	Lithonia Lighting	DSX1 LED 60C 1000 40K TSW MVOLT	DSX1 LED with 60 LEDs @ 1000 mA , 4000K , TYPE 5 WIDE OPTICS	22977	0.95	209
	B2	1	Lithonia Lighting	DSX1 LED 60C 1000 40K TSW MVOLT SPA / SSS 20 4C DM19AS DDBXD	DSX1 LED with 60 LEDs @ 1000 mA , 4000K , TYPE 5 WIDE OPTICS	22977	0.95	209
	C	2	Lithonia Lighting	DSX1 LED 60C 1000 40K TSW MVOLT HS SPUMBA	DSX1 LED with 60 LEDs @ 1000 mA , 4000K , TYPE 5 WIDE OPTICS WITH HOUSE-SIDE SHIELD	15611	0.95	209
	D	1	Lithonia Lighting	DSX1 LED 60C 530 40K LCCO MVOLT SPUMBA	DSX1 LED WITH 60 LEDs @530 mA, 4000K, LEFT CORNER CUTOFF OPTIC	9610	0.95	99
	E	1	Lithonia Lighting	DSX1 LED 60C 530 40K RCCO MVOLT SPUMBA	DSX1 LED WITH 60 LEDs @530 mA, 4000K, RIGHT CORNER CUTOFF OPTIC	9610	0.95	99
	F	2	Lithonia Lighting	DSX1 LED 60C 530 40K BLC MVOLT SPUMBA	DSX1 LED WITH 60 LEDs @530 mA, 4000K, BACKLIGHT CONTROL OPTIC	9892	0.95	99

Green Bay
2071 Lawrence Drive
De Pere, WI 54115
Office: 920-338-9010
Fax: 920-338-9015

elan LIGHTING

CEREBRAL PALSY ALLOUEZ
Site Lighting

Designer

Date
2/10/2017
Scale
1" = 25'
Drawing No.

Summary

BENCHMARK	BENCHMARK ESTABLISHED BY: ROBERT E. LEE & ASSOCIATES, INC. **FIELD VERIFY BENCHMARKS FOR ACCURACY.**	
NO.	DESCRIPTION	EL.
1	TOP OF NORTHEAST BOLT ON LIGHT POLE BASE	656.47
2	"OP" ON FIRE HYDRANT	663.14
3	"OP" ON FIRE HYDRANT	662.51
4	CROSS ON LIGHT POLE BASE OF THE ATT CONTROL BUILDING	657.30
5	TOP OF THE SOUTHEAST BOLT ON LIGHT POLE BASE	654.91

LEGEND

- POWER POLE
- POWER POLE W/GUY WIRE
- LIGHT POLE
- LIGHT POLE WITH MAST
- ELECTRIC METER
- TELEPHONE PEDESTAL
- CABLE TV PEDESTAL
- GAS VALVE
- GAS METER
- MAILBOX
- SIGN
- FLAGPOLE
- UTILITY PULL BOX
- DECIDUOUS TREE
- CONIFEROUS TREE
- BUSH
- CULVERT
- CONCRETE
- HANDICAP PARKING
- FIRE HYDRANT
- WATER VALVE/CURB STOP
- WATER MANHOLE
- REDUCER/INCREASER
- SANITARY MANHOLE
- STORM MANHOLE
- OPEN STORM MANHOLE
- STORM INLET
- POST
- IRON PIPE/ROD
- PK NAIL

- SANITARY SEWER (SIZE NOTED)
- FORCEMAIN (SIZE NOTED)
- STORM SEWER (SIZE NOTED)
- WATERMAIN (SIZE NOTED)
- GAS LINE
- OVERHEAD TELEPHONE LINE
- UNDERGROUND TELEPHONE LINE
- OVERHEAD ELECTRIC LINE
- UNDERGROUND ELECTRIC LINE
- OVERHEAD CABLE TV LINE
- CABLE TV LINE
- FIBER OPTIC LINE
- R/W LINE
- PROPERTY LINE
- EASEMENT LINE
- BUILDING SETBACK LINE
- SECTION LINE
- EDGE OF ASPHALT
- EDGE OF GRAVEL
- CURB & GUTTER
- TREE/BRUSH LINE
- CONTOUR LINE
- FENCE

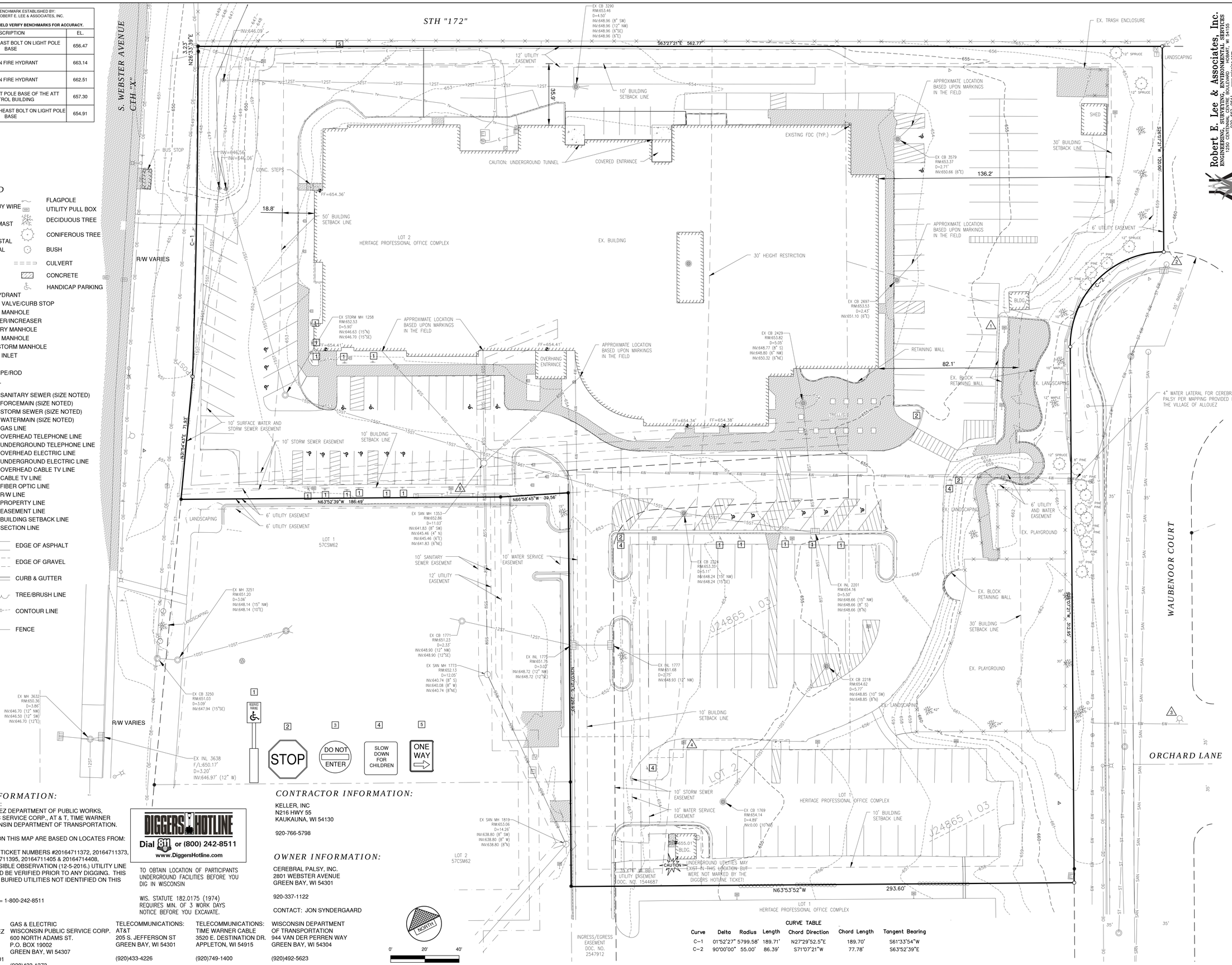

CURVE TABLE

Curve	Delta	Radius	Length	Chord Direction	Chord Length	Tangent Bearing
C-1	01°52'27"	5799.58'	189.71'	N27°29'52.5"E	189.70'	S61°33'54"W
C-2	90°00'00"	55.00'	86.39'	S71°07'21"W	77.78'	S63°52'39"E

UTILITY INFORMATION:

UTILITIES NOTIFIED:
VILLAGE OF ALLOUEZ DEPARTMENT OF PUBLIC WORKS, WISCONSIN PUBLIC SERVICE CORP., AT & T, TIME WARNER CABLE AND WISCONSIN DEPARTMENT OF TRANSPORTATION.

UTILITIES SHOWN ON THIS MAP ARE BASED ON LOCATES FROM:

DIGGER'S HOTLINE TICKET NUMBERS #20164711372, 20164711373, 20164711393, 20164711395, 20164711405 & 20164714408. (11-28-2016) AND VISIBLE OBSERVATION (12-5-2016.) UTILITY LINE LOCATIONS SHOULD BE VERIFIED PRIOR TO ANY DIGGING. THIS SITE MAY CONTAIN BURIED UTILITIES NOT IDENTIFIED ON THIS MAP.

DIGGERS HOTLINE = 1-800-242-8511

DIGGERS HOTLINE
Dial 811 or (800) 242-8511
www.DiggersHotline.com

TO OBTAIN LOCATION OF PARTICIPANTS UNDERGROUND FACILITIES BEFORE YOU DIG IN WISCONSIN

WIS. STATUTE 182.0175 (1974) REQUIRES MIN. OF 3 WORK DAYS NOTICE BEFORE YOU EXCAVATE.

MUNICIPALITY:
VILLAGE OF ALLOUEZ
DEPARTMENT OF PUBLIC WORKS
1900 LIBAL STREET
GREEN BAY, WI 54301

(920)448-2800

GAS & ELECTRIC
WISCONSIN PUBLIC SERVICE CORP.
600 NORTH ADAMS ST.
P.O. BOX 19002
GREEN BAY, WI 54307

(920)433-1373

TELECOMMUNICATIONS:
AT&T
205 S. JEFFERSON ST
GREEN BAY, WI 54301

(920)433-4226

TELECOMMUNICATIONS:
TIME WARNER CABLE
3520 E. DESTINATION DR.
APPLETON, WI 54915

(920)749-1400

WISCONSIN DEPARTMENT OF TRANSPORTATION
944 VAN DER PERREN WAY
GREEN BAY, WI 54304

(920)492-5623

CONTRACTOR INFORMATION:

KELLER, INC
N216 HWY 55
KAUKAUNA, WI 54130

920-766-5798

OWNER INFORMATION:

CEREBRAL PALSY, INC.
2801 WEBSTER AVENUE
GREEN BAY, WI 54301

920-337-1122

CONTACT: JON SYNDERGAARD

Robert E. Lee & Associates, Inc.
ENGINEERING, SURVEYING, ENVIRONMENTAL SERVICES
1250 CENTENNIAL CENTRE BOULEVARD HOBART, WI 54155
920-662-9641 www.releeinc.com

design matters
somerville architects | engineers
Somerville Inc. | 2100 Riverside Drive, Green Bay, WI 54301-2390
P 920.437.8136 | F 920.437.1131 | www.somervilleinc.com

SCALE VERIFICATION 1" AT FULL SCALE

Revisions	Description	Date

This drawing may not be reproduced without the written permission of Somerville, Inc
Unauthorized use of this drawing may be detected by dummy entries
Planmeasles@somervilleinc.com
© Somerville, Inc

OVERALL EXISTING SITE CONDITIONS

PROPOSED ADDITION AND REMODEL
CEREBRAL PALSY, INC.
GREEN BAY, WISCONSIN

Date: 03/13/2017
Project No. 6450
Sheet: C101

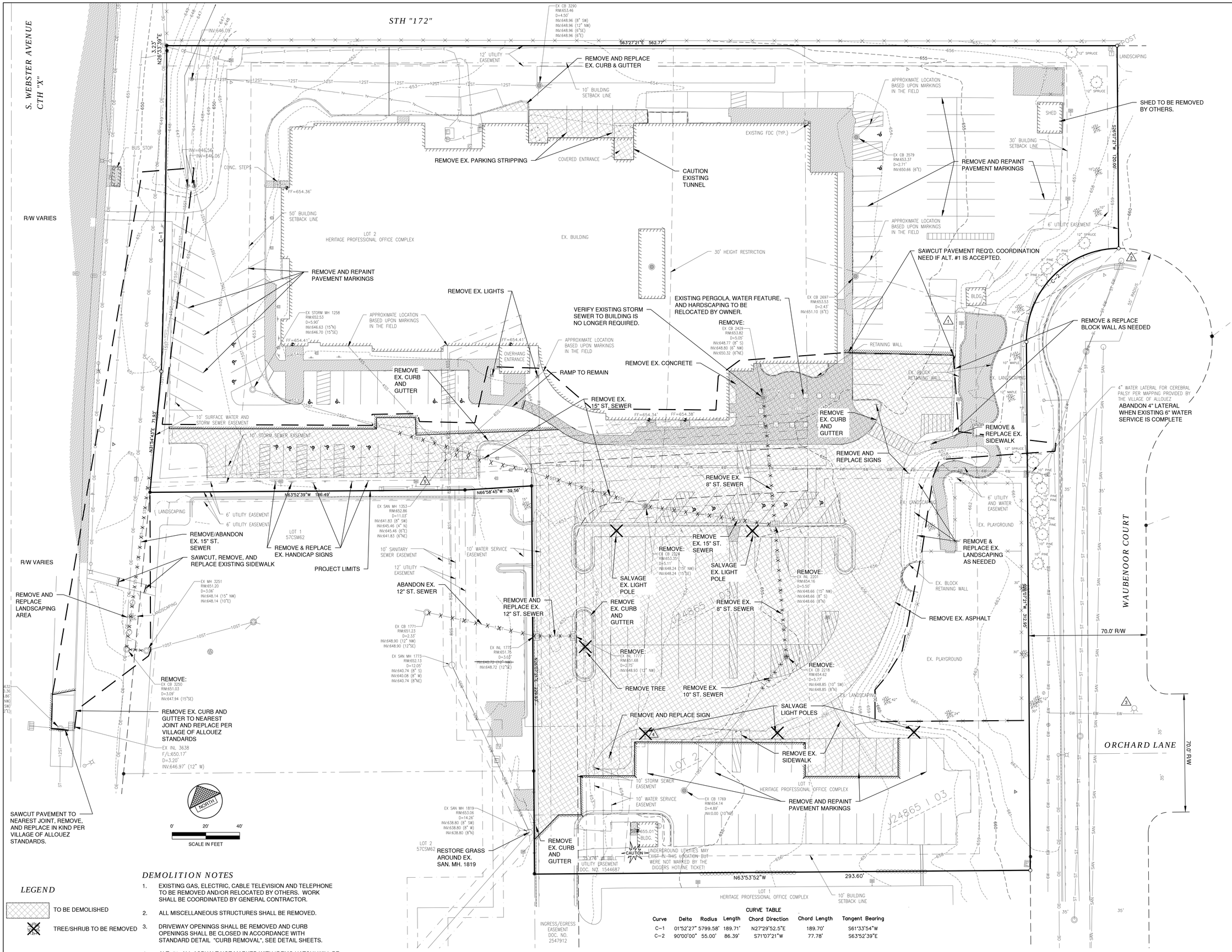

LEGEND

- TO BE DEMOLISHED
- TREE/SHRUB TO BE REMOVED

DEMOLITION NOTES

1. EXISTING GAS, ELECTRIC, CABLE TELEVISION AND TELEPHONE TO BE REMOVED AND/OR RELOCATED BY OTHERS. WORK SHALL BE COORDINATED BY GENERAL CONTRACTOR.
2. ALL MISCELLANEOUS STRUCTURES SHALL BE REMOVED.
3. DRIVEWAY OPENINGS SHALL BE REMOVED AND CURB OPENINGS SHALL BE CLOSED IN ACCORDANCE WITH STANDARD DETAIL "CURB REMOVAL", SEE DETAIL SHEETS.
4. ALT. #1- ALL ASPHALT NOT MARKED WITH "DEMO HATCH" WILL BE REMOVED/MILLED AND REPLACED.

CURVE TABLE

Curve	Delta	Radius	Length	Chord Direction	Chord Length	Tangent Bearing
C-1	01°52'27"	5799.58'	189.71'	N27°29'52.5"E	189.70'	S61°33'54"W
C-2	90°00'00"	55.00'	86.39'	S71°07'21"W	77.78'	S63°52'39"E

Robert E. Lee & Associates, Inc.
ENGINEERING, SURVEYING, ENVIRONMENTAL SERVICES
1250 CENTENNIAL CENTRE BOULEVARD HOBART, WI 54155
920-662-9641 www.releeinc.com

design matters
somerville architects | engineers
Somerville Inc. | 2100 Riverside Drive, Green Bay, WI 54301-2390
P 920.437.8136 | F 920.437.1131 | www.somervilleinc.com

SCALE VERIFICATION 1" AT FULL SCALE

Revisions	Description	Date

This drawing may not be reproduced without the written permission of Somerville, Inc. Prints or reproductions of this drawing may be obtained by contacting Somerville, Inc. Plansroom@somervilleinc.com
© Somerville, Inc.

EXISTING SITE DEMOLITION PLAN

PROPOSED ADDITION AND REMODEL
CEREBRAL PALSY, INC.
GREEN BAY, WISCONSIN

Date: 03/13/2017
Project No. 6450
Sheet: C102

STH "172"

S. WEBSTER AVENUE
CTH "X"

12' UTILITY EASEMENT

10' BUILDING SETBACK LINE

BUS STOP

EX. CONC. STEPS

50' BUILDING SETBACK LINE

LOT 2
HERITAGE PROFESSIONAL OFFICE COMPLEX

EX. BUILDING

30' HEIGHT RESTRICTION

CAUTION: UNDERGROUND TUNNEL

COVERED ENTRANCE

EX. AREA WELL

EXISTING FDC (TYP.)

ADS DROP-OFFS
FOR 7 PASSENGER VANS

PR. SITE SIGN LOCATION
VERIFY LOCATION WITH
GENERAL CONTRACTOR

OVERHANG ENTRANCE

AREA WELL

EXISTING LIGHT POLES AND
FLAG POLES TO REMAIN

BIKE RACK, U-LINE
H-2544BL OR EQUAL

10' SURFACE WATER AND
STORM SEWER EASEMENT

10' STORM SEWER EASEMENT

LANDSCAPING STONE (TYP.)

CONCRETE CURB
SEE DETAIL SHEET

LANDSCAPING

6' UTILITY EASEMENT

6' UTILITY EASEMENT

LOT 1
57CSM62

UNDERGROUND STORM
WATER FEATURE

EXISTING
DRIVEWAY
TO REMAIN

10' BUILDING
SETBACK LINE

10' SANITARY
SEWER EASEMENT

10' WATER SERVICE
EASEMENT

12' UTILITY
EASEMENT

REMOVE AND REPLACE
CONCRETE SIDEWALK.

PROJECT LIMITS

REMOVE AND REPLACE
CONCRETE ROAD PER
VILLAGE STANDARDS.

REMOVE AND REPLACE
CURB & GUTTER PER
VILLAGE STANDARDS.

DETECTABLE WARNING
FIELD (TYP.)

PR. STANDARD CURB
& GUTTER

PROPOSED BUILDING ADDITION
21,404 S.F.
FF EL. ±654.36 (MATCH EXISTING)

KNOX BOX LOCATION

PR. SHEDDING CURB
& GUTTER

LIGHT POLE (TYP.) SEE
SHEET CE101 FOR
FINAL LIGHTING INFO

CANOPY (TYP.)

RETAINING WALL
SEE DETAIL SHEET C106.
MATCH EXISTING
RETAINING WALL

RESTORE ALL GRASSY AREAS
THAT ARE DISTURBED BY
UTILITY WORK (TYP.)

LOT 2
57CSM62

33' V.C.E. W. BELL
UTILITY EASEMENT
DOC. NO. 1544687

10' BUILDING
SETBACK LINE

LOT 1
HERITAGE PROFESSIONAL OFFICE COMPLEX

INGRESS/EGRESS
EASEMENT
DOC. NO.
2547912

LANDSCAPING

CONSTRUCT TEMPORARY STAFF DRIVEWAY
FOR PARKING LOT ACCESS. NO CONSTRUCTION
VEHICLE ACCESS ALLOWED

6' UTILITY EASEMENT

TEMPORARILY RELOCATE
EXISTING 6" PINE TREE

EX. BLOCK
RETAINING WALL

LANDSCAPING

EX. LANDSCAPING

6' UTILITY
AND WATER
EASEMENT

EX. PLAYGROUND

EX. BLOCK
RETAINING WALL

EX. PLAYGROUND

WAUBENOOR COURT

ORCHARD LANE

NOTES

1. ALL AREAS DESIGNATED AS "GREEN SPACE" OR "LAWN", SHALL BE TOPSOILED TO A DEPTH OF 6 INCHES, SEEDED AND MULCHED. AREA TO BE RAKED FREE OF STONES AND CLUMPS.
2. THE BUILDING FOOTPRINT WILL SERVE AS THE MAIN STAGING AREA WITH SUPPLEMENTAL STAGING BEING SHARED ON THE ADJACENT PARKING LOT.
3. CONSTRUCTION ACCESS SHALL BE ON MAIN ACCESS DRIVE

LEGEND

- EX. CONCRETE PAVEMENT
- PR. CONCRETE PAVEMENT
- ASPHALT PAVEMENT (17,070 S.F.)
- BASE BID- RESEAL AND RESTRIPE
  ALT 1 - REMOVE AND REPLACE ASPHALT
- LANDSCAPE AREA
- GREEN SPACE
- PROPOSED 18" CURB & GUTTER (UNLESS OTHERWISE NOTED)
- PROPOSED SHEDDING CURB & GUTTER
- TRAFFIC FLOW ARROW
- HANDICAPPED PARKING
- (12) INDICATES NUMBER OF PARKING STALLS
- INDICATES ADA ROUTES

*NOTE: ALL DIMENSIONS ARE TO THE FACE OF CURB, UNLESS NOTED OTHERWISE

PARKING DATA

TOTAL PARKING SPACES PROVIDED = 146
HANDICAP ACCESSIBLE PARKING SPACES = 16
TOTAL PARKING SPACES REQUIRED = 128
(PARKING CALCULATIONS PROVIDED BY SOMERVILLE INC.)

SITE DATA

TOTAL AREA = 4.78 ACRES, 208,315 S.F.
BUILDING AREA = 1.59 ACRES, 69,090 S.F. (33.3%)
SIDEWALK/PARKING LOT AREA = 2.20 ACRES, 96,171 S.F. (46.0%)
GREEN SPACE = 0.99 ACRES, 43,054 S.F. (20.7%)

ZONING

"C" PROFESSIONAL OFFICE DISTRICT

CONSTRUCTION CLASSIFICATION

ADDITION IS TYPE IIB

PARCEL NO.

AL-1149-906, AL-1149-337, AL-1149-338

CURVE TABLE

Curve	Delta	Radius	Length	Chord Direction	Chord Length	Tangent Bearing
C–1	01°52'27"	5799.58'	189.71'	N27°29'52.5"E	189.70'	S61°33'54"W
C–2	90°00'00"	55.00'	86.39'	S71°07'21"W	77.78'	S63°52'39"E

0' 20' 40'
SCALE IN FEET

Robert E. Lee & Associates, Inc.
ENGINEERING, SURVEYING, ENVIRONMENTAL SERVICES
1250 CENTRAL CENTRE BOULEVARD HOBART, WI 54155
P 920.662.0461 www.reinc.com

design matters

somerville
architects | engineers
Somerville Inc. | 2100 Riverside Drive, Green Bay, WI 54301-2390
P 920.437.8136 | F 920.437.1131 | www.somervilleinc.com

SCALE VERIFICATION
1" AT FULL SCALE

Revisions	Description	Date

This drawing may not be reproduced without the written permission of Somerville, Inc. Visual contact with these drawings shall constitute prima facie evidence of acceptance of these restrictions.
© Somerville, Inc. 2016

PROPOSED ADDITION AND REMODEL
CEREBRAL PALSY, INC.
GREEN BAY, WISCONSIN

SITE PLAN

Date: 03/13/2017
Project No. 6450
Sheet: C103

File: R:\12001\12281\12282541\dwg\12282542.dwg
Plot Date: Mar 13, 2017 - 3:37pm

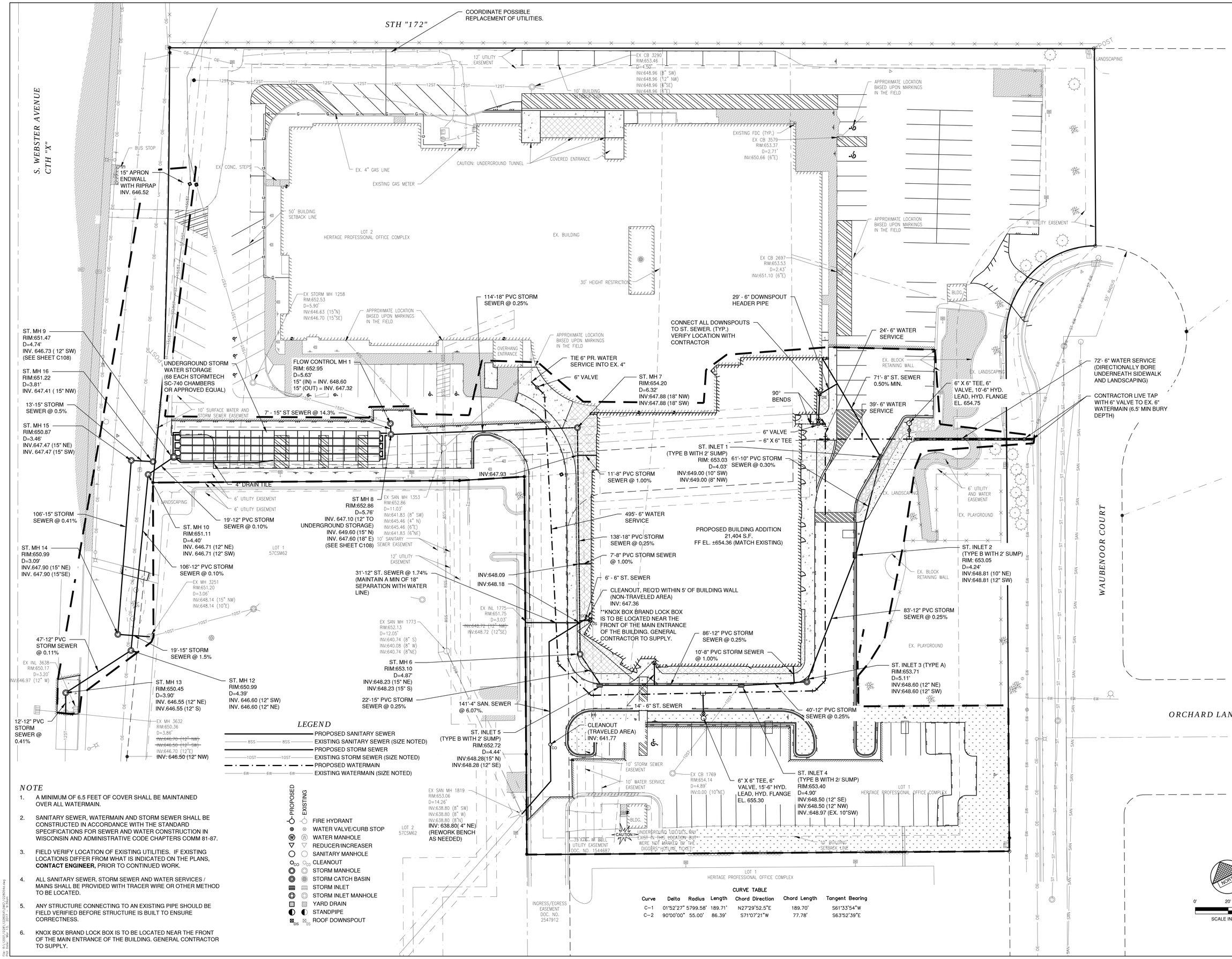

LEGEND

- PROPOSED SANITARY SEWER
- EXISTING SANITARY SEWER (SIZE NOTED)
- PROPOSED STORM SEWER
- EXISTING STORM SEWER (SIZE NOTED)
- PROPOSED WATERMAIN
- EXISTING WATERMAIN (SIZE NOTED)

PROPOSED	EXISTING	
		FIRE HYDRANT
		WATER VALVE/CURB STOP
		WATER MANHOLE
		REDUCER/INCREASER
		SANITARY MANHOLE
		CLEANOUT
		STORM MANHOLE
		STORM CATCH BASIN
		STORM INLET
		STORM INLET MANHOLE
		YARD DRAIN
		STANDPIPE
		ROOF DOWNSPOUT

NOTE

1. A MINIMUM OF 6.5 FEET OF COVER SHALL BE MAINTAINED OVER ALL WATERMAIN.
2. SANITARY SEWER, WATERMAIN AND STORM SEWER SHALL BE CONSTRUCTED IN ACCORDANCE WITH THE STANDARD SPECIFICATIONS FOR SEWER AND WATER CONSTRUCTION IN WISCONSIN AND ADMINISTRATIVE CODE CHAPTERS COMM 81-87.
3. FIELD VERIFY LOCATION OF EXISTING UTILITIES. IF EXISTING LOCATIONS DIFFER FROM WHAT IS INDICATED ON THE PLANS, **CONTACT ENGINEER,** PRIOR TO CONTINUED WORK.
4. ALL SANITARY SEWER, STORM SEWER AND WATER SERVICES / MAINS SHALL BE PROVIDED WITH TRACER WIRE OR OTHER METHOD TO BE LOCATED.
5. ANY STRUCTURE CONNECTING TO AN EXISTING PIPE SHOULD BE FIELD VERIFIED BEFORE STRUCTURE IS BUILT TO ENSURE CORRECTNESS.
6. KNOX BOX BRAND LOCK BOX IS TO BE LOCATED NEAR THE FRONT OF THE MAIN ENTRANCE OF THE BUILDING. GENERAL CONTRACTOR TO SUPPLY.

CURVE TABLE

Curve	Delta	Radius	Length	Chord Direction	Chord Length	Tangent Bearing
C-1	01°52'27"	5799.58'	189.71'	N27°29'52.5"E	189.70'	S61°33'54"W
C-2	90°00'00"	55.00'	86.39'	S71°07'21"W	77.78'	S63°52'39"E

Robert E. Lee & Associates, Inc.
ENGINEERING, SURVEYING, ENVIRONMENTAL SERVICES
1250 CENTRAL CENTRE BOULEVARD HOBART, WI 54155
920-437-8454 www.robertelee.com

design matters

somerville architects | engineers
Somerville Inc. | 2100 Riverside Drive, Green Bay, WI 54301-2390
P 920.437.8136 | F 920.437.1131 | www.somervilleinc.com

SCALE VERIFICATION 1" AT FULL SCALE

Revisions	Description	Date

This drawing may not be reproduced without the written permission of Somerville, Inc. Visual contact with these plans shall constitute prima facie evidence of acceptance of these restrictions.
© Somerville, Inc. 2016

UTILITY PLAN

PROPOSED ADDITION AND REMODEL
CEREBRAL PALSY, INC.
GREEN BAY, WISCONSIN

Date: 03/13/2017
Project No. 6450
Sheet: C104

File: R:\2000\12285\12285A\DWG\12285d44.dwg
By: Doug Hart - Mar 13, 2017 - 3:24pm

STH "172"

S. WEBSTER AVENUE
CTH "X"

10' BUILDING SETBACK LINE

S63°27'21"E 562.77'

12' UTILITY EASEMENT

N26°33'39"E 3.23'

MATCH EX. E.P. ±653.70

MATCH EX. E.P. ±653.79

MATCH EX. E.P. ±653.81

MATCH EX. E.P. ±653.92

S/W 653.94
S/W 653.96
S/W 653.97

EXISTING FDC (TYP.)

LANDSCAPING

12" SPRUCE

BUS STOP

EX. CONC. STEPS

FF=654.36'

50' BUILDING SETBACK LINE

LOT 2
HERITAGE PROFESSIONAL OFFICE COMPLEX

EX. BUILDING
F.F. ELEV. 654.36

30' HEIGHT RESTRICTION

INLET PROTECTION (TYP)

MATCH EX. E.P. ±656.40
MATCH EX. E.P. ±655.92
MATCH EX. E.P. ±655.85
MATCH EX. E.P. ±655.80

6' UTILITY EASEMENT

E/P 656.45

7" PINE
6" PINE

BLDG.

55' RADIUS

MATCH EX. E.P. ±655.28

S/W 654.20
EP 654.04

MATCH EX. S/W ±654.30

EX. BLOCK RETAINING WALL

EX. LANDSCAPING

10" MAPLE
12" MAPLE

S/W 654.08
EP 653.58

E/P 654.48

MATCH EX. S/W ±656.00

MATCH EX. S/W ±656.05

S/W 654.14
S/W 654.20

TRELLIS

DS

S/W 654.20
S/W 654.16
S/W 653.73

S/W 654.13
S/W 654.14
S/W 653.74
S/W 654.20
S/W 653.80

OVERHANG ENTRANCE

FF=654.41'

S/W 654.26

MATCH EX. E.P. ±652.97
MATCH EX. E.P. ±653.06
MATCH EX. E.P. ±652.95

E/P 653.68

10' SURFACE WATER AND STORM SEWER EASEMENT

MATCH EX. E.P. ±651.29

N31°54'43"E 71.93'

E/P 651.28
E/P 651.74
RIM 651.47

RIM 651.22
RIM 650.87

RIM 652.95
RIM 652.86

MATCH EX. E.P. ±653.26

S/W 654.18
RIM 654.20
S/W 654.02

E/P 654.08
S/W 655.62
S/W 655.91

E/P 653.03

S/W 654.13
S/W 654.03
EP 653.53

E/P 653.09
E/P 652.93

N63°52'39"W 186.49'

N66°58'45"W 39.56'

RIM 651.11

E/P 653.18

S/W 654.20
S/W 654.08
EP 653.58

E/P 653.38
S/W 653.30
EP 653.30

S/W 654.13
EP 653.63

S/W 654.15
EP 654.15

S/W 653.46
S/W 653.56
S/W 653.24
EP 653.24

EX. PLAYGROUND

6' UTILITY AND WATER EASEMENT

LANDSCAPING

6' UTILITY EASEMENT
E/P 651.73

6' UTILITY EASEMENT

LOT 1
57CSM62

10' SANITARY SEWER EASEMENT

12' UTILITY EASEMENT

PROPOSED BUILDING ADDITION
21,404 S.F.
FF EL. ±654.36 (MATCH EXISTING)

S/W 654.17
EP 653.67
S/W 654.17
EP 653.67
S/W 654.29

E/P 653.05

E/P 653.42

F/L 651.75

RETAINING WALL
SEE DETAIL SHEET C106.
MATCH EXISTING
RETAINING WALL

EX. PLAYGROUND

E/P 654.20

R/W 655.50
R/W 598.50
R/W 600.50
R/W 600.25
R/W 657.00

S/W 652.97
EP 652.47

S/W 653.12
RIM 653.10
S/W 653.12

S/W 653.34
S/W 654.28
S/W 654.14
EP 653.64

E/P 654.26
S/W 654.27

S/W 654.25
S/W 654.13
EP 653.63

S/W 653.00
EP 652.50

S/W 653.88
EP 653.68

S/W 654.13
EP 654.13

S/W 654.15
EP 653.65
S/W 654.58
EP 654.58

S/W 653.90
FL 653.40

E/P 653.72

S/W 653.00
EP 652.50

S/W 653.22
FL 652.72

E/P 652.92

E/P 652.58

E/P 653.57

E/P 653.85

MATCH EX. E.P. ±654.66

RIM 653.71
E/P 654.97

E/P 654.57
E/P 655.65
E/P 656.53

E/P 658.70
MATCH EX. E.P. ±657.58

MATCH EX. E.P. ±658.21
E/P 658.50
E/P 658.60
MATCH EX. E.P. ±658.30
E/P 658.10
E/P 658.30
E/P 658.00

WAUBENOOR COURT

ORCHARD LANE

MATCH EX. E.P. ±654.37
MATCH EX. E.P. ±652.71
MATCH EX. E.P. ±652.75
MATCH EX. E.P. ±652.66

E/P 654.51
E/P 654.40

MATCH EX. E.P. ±656.30
E/P 656.39
E/P 656.06

E/P 657.54
MATCH EX. E.P. ±657.21
E/P 657.18
MATCH EX. E.P. ±658.17
MATCH EX. E.P. ±657.94

10' STORM SEWER EASEMENT

10' WATER SERVICE EASEMENT

RIM 654.14

E/P 653.55

LOT 1
HERITAGE PROFESSIONAL OFFICE COMPLEX

MATCH EX. E.P. ±657.07
MATCH EX. E.P. ±656.19
MATCH EX. E.P. ±655.95

LOT 2
57CSM62

MATCH EX. E.P. ±652.65

655.01
BLDG.

CAUTION

"UNDERGROUND UTILITIES MAY EXIST IN THIS LOCATION BUT WERE NOT MARKED BY THE DIGGERS HOTLINE, YET!"

35' ACCESS & UTILITY EASEMENT DOC. NO. 1544687

N63°53'52"W 293.60'

10' BUILDING SETBACK LINE

LOT 1
HERITAGE PROFESSIONAL OFFICE COMPLEX

INGRESS/EGRESS EASEMENT DOC. NO. 2547912

SILT FENCE (TYP)

BENCHMARK	BENCHMARK ESTABLISHED BY: ROBERT E. LEE & ASSOCIATES, INC. **FIELD VERIFY BENCHMARKS FOR ACCURACY.**	
NO.	DESCRIPTION	EL.
1	TOP OF NORTHEAST BOLT ON LIGHT POLE BASE	656.47
2	"OP" ON FIRE HYDRANT	663.14
3	"OP" ON FIRE HYDRANT	662.51
4	CROSS ON LIGHT POLE BASE OF THE ATT CONTROL BUILDING	657.30
5	TOP OF THE SOUTHEAST BOLT ON LIGHT POLE BASE	654.91

EROSION CONTROL

ALL EROSION CONTROL PRACTICES INDICATED ON THIS PLAN ARE APPROXIMATE LOCATIONS ONLY. THE ACTUAL SITE MAY REQUIRE MORE OR LESS EROSION CONTROL DEPENDING ON THE CURRENT CONDITION OF THE SITE.

1. SILT FENCE IS REQUIRED DOWNSLOPE OF ANY DISTURBED LAND THAT MAY CARRY SEDIMENTS OFF SITE.
2. A TRACKING PAD IS REQUIRED AT ANY INGRESS/EGRESS LOCATION, WHERE SEDIMENT MAY BE TRACKED OFF-SITE.
3. PROPER INLET PROTECTION SHALL BE USED DEPENDING ON THE INLET TYPE.
4. ALL NECESSARY SITE DEWATERING SHALL BE PERFORMED IN ACCORDANCE WITH WDNR TECHNICAL STANDARD 1061.

LEGEND

T/C 999.99	TOP OF CURB ELEVATION
F/L 888.88	FLOW LINE ELEVATION
S/W 666.66	TOP OF SIDEWALK ELEVATION
E/P 555.55	EDGE OF PAVEMENT ELEVATION
R/W 444.44	TOP OF RETAINING WALL ELEVATION
333.33	GROUND ELEVATION
	DRAINAGE SWALE
	DRAINAGE DIVIDE
	SILT FENCE
	BALE DITCH CHECK
	FLOW ARROW
	TRACKING PAD
	INLET PROTECTION

CURVE TABLE

Curve	Delta	Radius	Length	Chord Direction	Chord Length	Tangent Bearing
C-1	01°52'27"	5799.58'	189.71'	N27°29'52.5"E	189.70'	S61°33'54"W
C-2	90°00'00"	55.00'	86.39'	S71°07'21"W	77.78'	S63°52'39"E

0' 20' 40'
SCALE IN FEET

Robert E. Lee & Associates, Inc.
ENGINEERING, SURVEYING, ENVIRONMENTAL SERVICES
1250 CENTRAL CENTRE BOULEVARD HOBART, WI 54155
920-662-9641 www.relee.com

somerville architects | engineers
Somerville Inc. | 2100 Riverside Drive, Green Bay, WI 54301-3390
P 920.437.8136 | F 920.437.1131 | www.somervilleinc.com

design matters

Revisions	Description	Date

SCALE VERIFICATION
1" AT FULL SCALE

This drawing may not be reproduced without the written permission of Somerville, Inc. Visual contact with these plans shall constitute prima facie evidence of acceptance of these restrictions.
© Somerville, Inc. 2016

GRADING PLAN AND EROSION CONTROL PLAN

PROPOSED ADDITION AND REMODEL
CEREBRAL PALSY, INC.
GREEN BAY, WISCONSIN

Date: 03/13/2017
Project No. 6450
Sheet: C105

File: R:\12001\12281\122805413\dwg\122805544.dwg
Plot Date: Mar 13, 2017 - 4:36pm

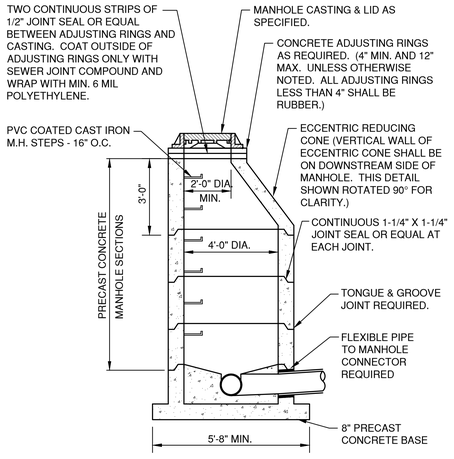

SANITARY AND STORM STANDARD MANHOLE 8"-24" (INCLUSIVE)

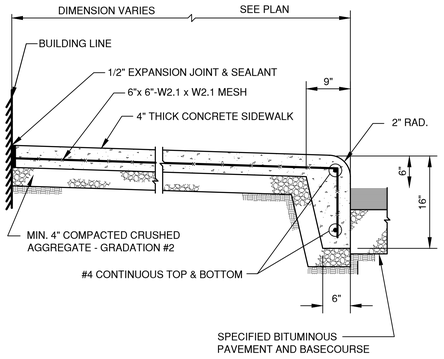

SIDEWALK WITH INTEGRAL CURB

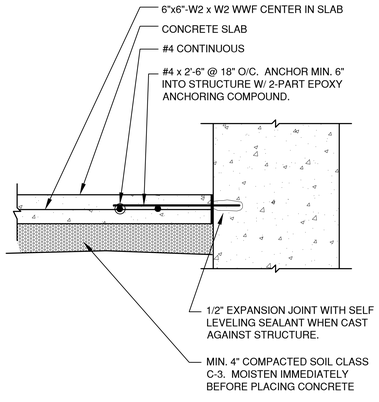

TYPICAL SIDEWALK ADJACENT TO STRUCTURE

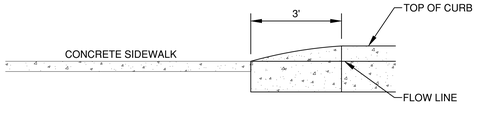

CURB TAPER DETAIL

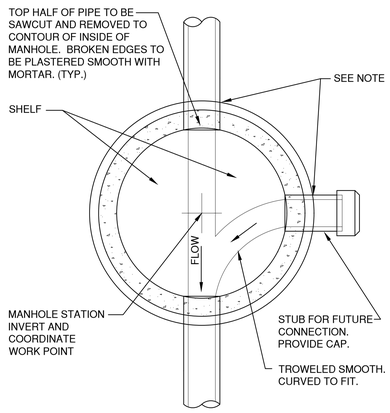

NOTE:
FOR PVC PIPE PROVIDE AN APPROVED FLEXIBLE JOINT.

MANHOLE BASE PLAN 8" - 60" (INCLUSIVE)

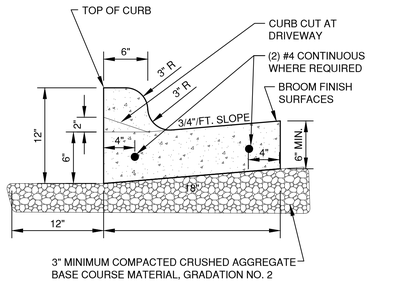

3" MINIMUM COMPACTED CRUSHED AGGREGATE BASE COURSE MATERIAL, GRADATION NO. 2

NOTE:
PROVIDE 1" EXPANSION JOINTS AT 300' INTERVALS AND 3 FEET EACH SIDE OF INLET CASTINGS OR AS SPECIFIED. PROVIDE CONTRACTION JOINTS EVERY 10' OR AS DIRECTED.

STANDARD CURB & GUTTER

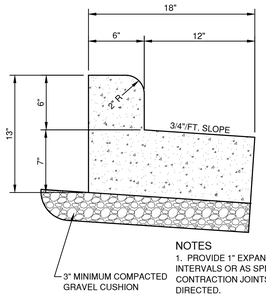

NOTES
1. PROVIDE 1" EXPANSION JOINTS AT 300' INTERVALS OR AS SPECIFIED. PROVIDE CONTRACTION JOINTS EVERY 30' OR AS DIRECTED.

2. AT REMOVAL AND REPLACEMENT AREAS AND AT TIES TO EXISTING CURB & GUTTER PROVIDE 2-#5 BARS, 18" LONG. DRILL AND GROUT INTO EXISTING CURB AND GUTTER 9 INCHES.

SHEDDING CURB DETAIL

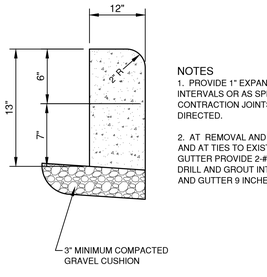

NOTES
1. PROVIDE 1" EXPANSION JOINTS AT 300' INTERVALS OR AS SPECIFIED. PROVIDE CONTRACTION JOINTS EVERY 30' OR AS DIRECTED.

2. AT REMOVAL AND REPLACEMENT AREAS AND AT TIES TO EXISTING CURB & GUTTER PROVIDE 2-#5 BARS, 18" LONG. DRILL AND GROUT INTO EXISTING CURB AND GUTTER 9 INCHES.

CONCRETE CURB DETAIL

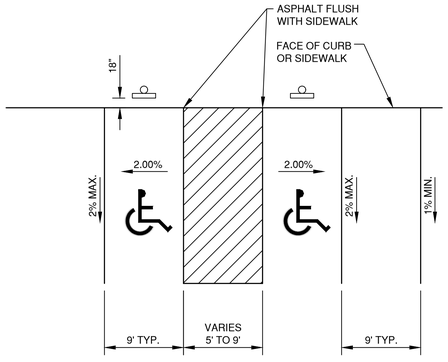

NOTE:
ALL ELEVATIONS ARE RELATIVE TO HORIZONTAL TOP OF CURB.

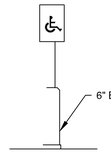

TYPICAL ACCESSIBLE PARKING STALL LAYOUT

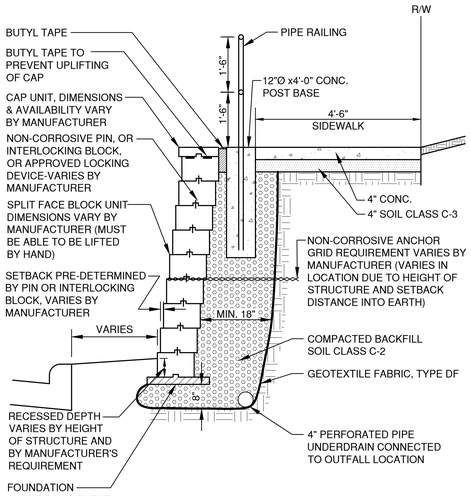

PRECAST BLOCK RETAINING WALL DETAIL

HEIGHT OF WALL ABOVE FINISHED GRADE NOT TO EXCEED 6'

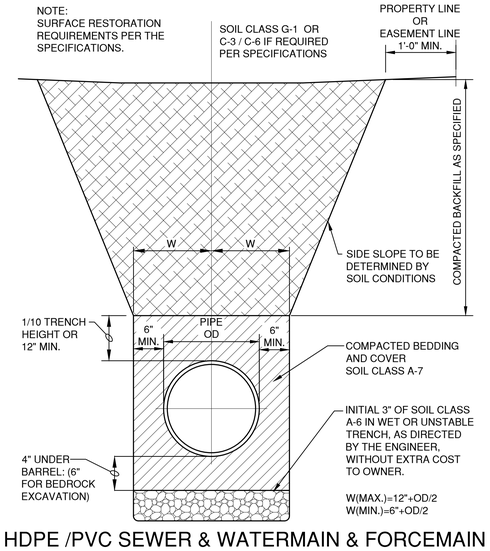

HDPE /PVC SEWER & WATERMAIN & FORCEMAIN BEDDING & TRENCH SECTION

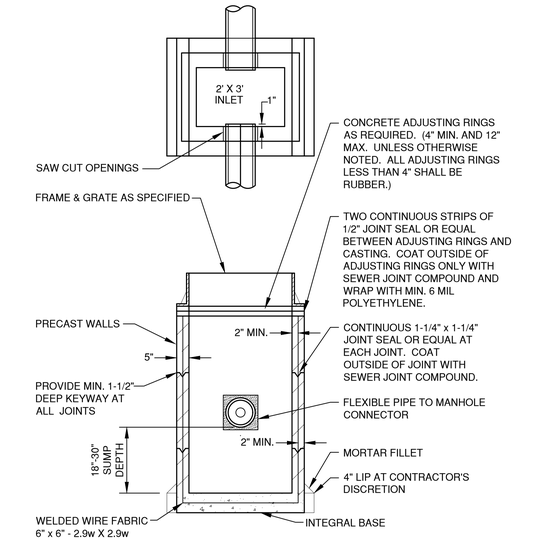

ALL PRECAST INLET UNITS SHALL CONFORM TO THE PERTINENT REQUIREMENTS OF AASHTO DESIGNATION M 199

TYPE 'B' STORM INLET

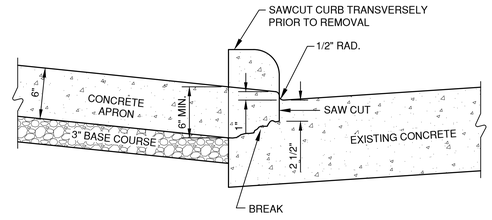

CURB REMOVAL FOR DRIVEWAY OPENING WITH CONCRETE APRON ON CONCRETE SURFACE STREETS

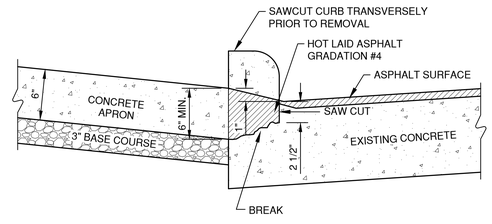

CURB REMOVAL FOR DRIVEWAY OPENING WITH CONCRETE APRON ON ASPHALT OVER CONCRETE SURFACE STREETS

CURB REMOVAL DETAIL

NOTE:
PROVIDE CONTRACTION JOINTS AT MAXIMUM 20' SPACING BY SAW CUTTING OR INSERTION OF DIVIDER PLATES

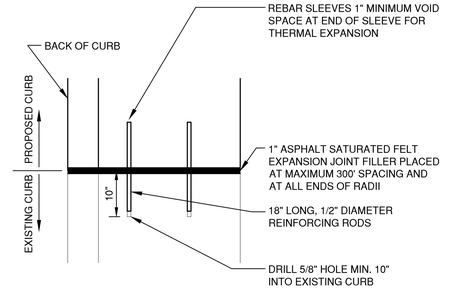

CURB TIE-IN DETAIL

(PROPOSED TO EXISTING)

Robert E. Lee & Associates, Inc.
ENGINEERING, SURVEYING, ENVIRONMENTAL SERVICES
1250 CENTRAL CENTRE BOULEVARD HOBART, WI 54155
P 920.662.0461 www.reinc.com

somerville architects | engineers
Somerville Inc. | 2100 Riverside Drive, Green Bay, WI 54301-2390
P 920.437.8136 | F 920.437.1131 | www.somervilleinc.com

design matters

SCALE VERIFICATION 1" AT FULL SCALE

Revisions	Description	Date

This drawing may not be reproduced without the written permission of Somerville, Inc. Unauthorized use of this drawing may be misleading and may be construed as misrepresentation of Somerville, Inc. 2016

MISCELLANEOUS DETAILS

PROPOSED ADDITION AND REMODEL
CEREBRAL PALSY, INC.
GREEN BAY, WISCONSIN

Date: 03/13/2017
Project No. 6450
Sheet: C106

File: R:\1900\1228\1228DA1\DWG\DETAILS.dwg
Plot Date: Mar 13, 2017 - 9:56am

NOTE
CLEANOUT LINE TO BE THE SAME SIZE & MATERIAL AS SEWER MAIN.

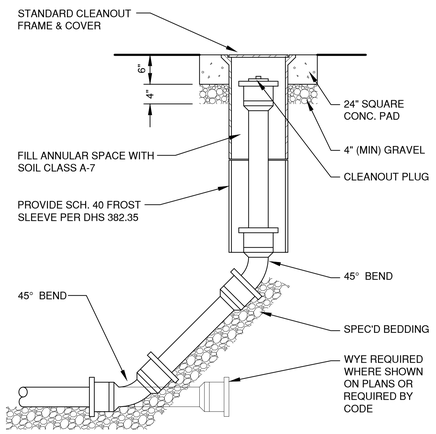

CLEAN-OUT DETAIL (TRAVELED AREAS)

NOTE: CLEANOUT LINE TO BE THE SAME SIZE & MATERIAL AS SEWER MAIN

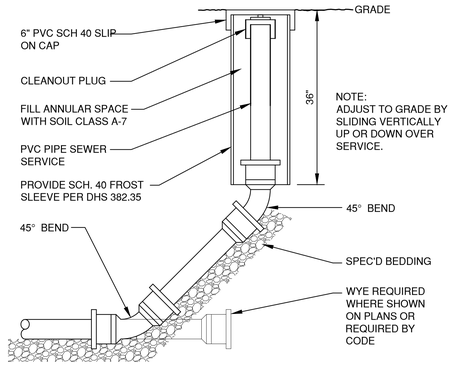

CLEAN-OUT DETAIL (NON-TRAVELED AREAS)

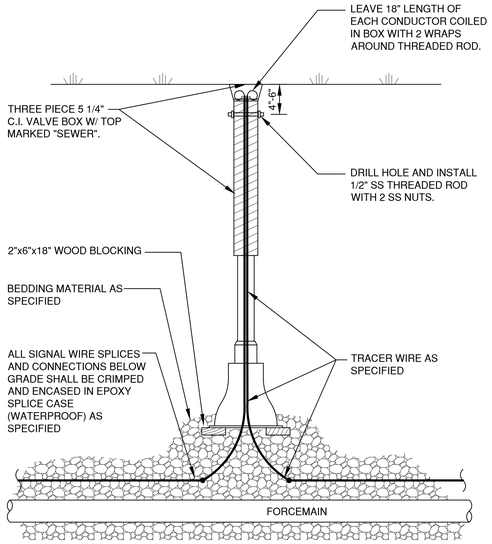

TRACER WIRE SIGNAL CONNECTION BOX

LID TOP VIEW

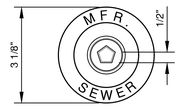

LID SIDE VIEW

COLLAR TOP VIEW

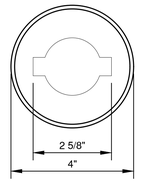

COMPLETE BOX SIDE VIEW

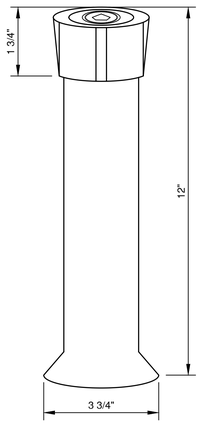

CASTING CONFORMS TO:
ASTM SPECIFICATION A-48 CLASS 30
COUNTRY OF ORIGIN: USA

ABS CONFORMS TO:
ASTM SPECIFICATION D1788
COUNTRY OF ORIGIN: USA

SEWER TRACER WIRE ACCESS BOX

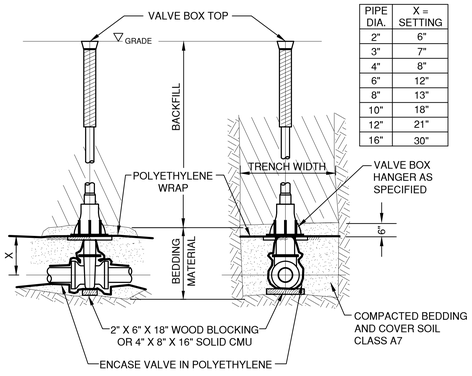

PIPE DIA.	X = SETTING
2"	6"
3"	7"
4"	8"
6"	12"
8"	13"
10"	18"
12"	21"
16"	30"

SIDE VIEW FRONT VIEW

VALVE BOX SETTING

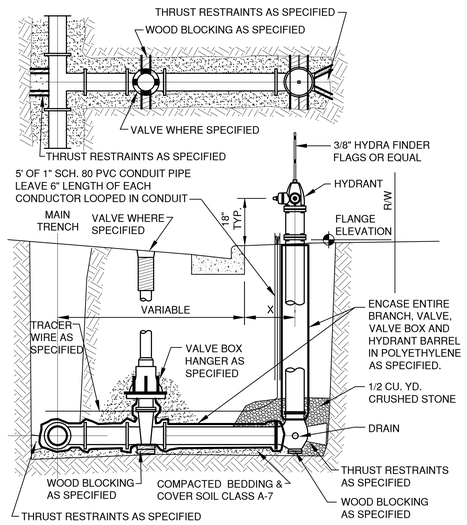

STANDARD HYDRANT SETTING CURB SECTION

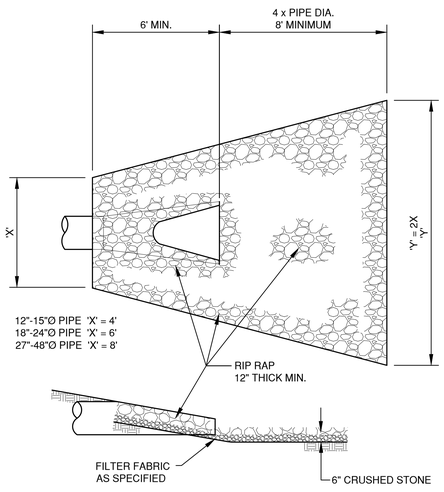

ENDWALL RIP RAP DETAIL

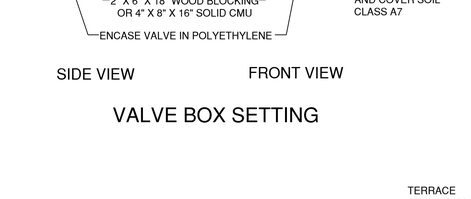

TYPICAL SECTION

NOTE:
REFER TO SPECIFICATIONS FOR REINFORCEMENTS.

TOOLED CONTRACTION JOINT EXPANSION JOINT

WALK WIDTH	CONTRACTION JOINT SPACING		EXPANSION JOINT SPACING
	TRANSVERSE	LONGITUDINAL	
4'	4'	NOT REQ'D	100' MAX.
5'	5'	NOT REQ'D.	100' MAX.
6'	6'	NOT REQ'D.	100' MAX.
8'	4'	4'	100' MAX.
10'	5'	5'	100' MAX.
12'	6'	6'	100' MAX.

SIDEWALK DETAIL

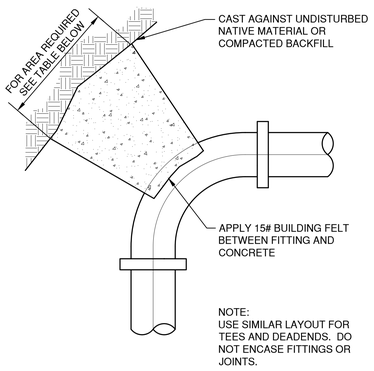

NOTE:
USE SIMILAR LAYOUT FOR TEES AND DEADENDS. DO NOT ENCASE FITTINGS OR JOINTS.

THRUST BLOCK AREA REQUIREMENTS, S.F.					
DEGREE OF BEND	4" PIPE	6" PIPE	8" PIPE	10" PIPE	12" PIPE
5° TO 22.5°	1.0	1.0	2.0	3.0	4.0
23° TO 45°	1.0	2.0	4.0	6.0	8.0
46° TO 90°	2.0	4.0	7.0	11.0	15.0
TEE OR DEAD END	2.0	3.0	5.0	8.0	10.0

TYPICAL THRUST BLOCK

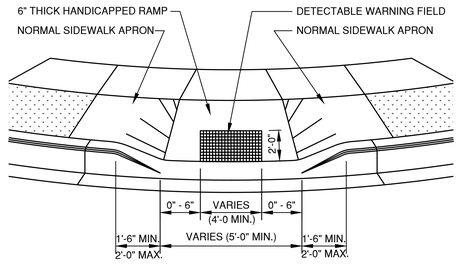

TYPE I HANDICAPPED CURB RAMP

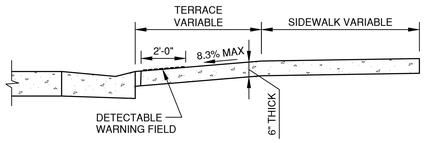

SECTION PARALLEL TO CENTERLINE OF RAMP

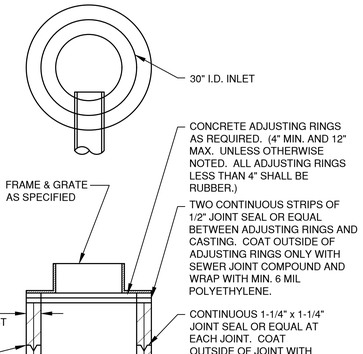

ALL PRECAST INLET UNITS SHALL CONFORM TO THE PERTINENT REQUIREMENTS OF AASHTO DESIGNATION M 199

TYPE 'A' STORM INLET

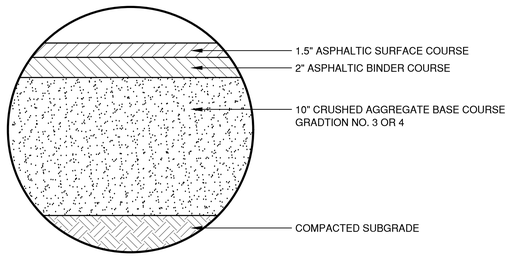

PAVEMENT DETAIL

Robert E. Lee & Associates, Inc.
ENGINEERING, SURVEYING, ENVIRONMENTAL SERVICES
1250 CENTENNIAL CENTRE BOULEVARD HOBART, WI 54155
P 920.434.6900 F 920.434.9494 www.lee-engineering.com

design matters
somerville architects | engineers
Somerville Inc. | 2100 Riverside Drive, Green Bay, WI 54301-2390
P 920.437.8136 | F 920.437.1131 | www.somervilleinc.com

SCALE VERIFICATION 1" AT FULL SCALE
Revisions Description Date
This drawing may not be reproduced without the written permission of Somerville, Inc. Unauthorized use of this drawing may be subject to civil penalties. © Somerville, Inc. 2016

MISCELLANEOUS DETAILS

PROPOSED ADDITION AND REMODEL
CEREBRAL PALSY, INC.
GREEN BAY, WISCONSIN

Date: 03/13/2017
Project No. 6450
Sheet: C107

File: R:\12000\12200\12205\4-DWG\DETAILS.dwg
Date: Mar 08, 2017 - 10:28am

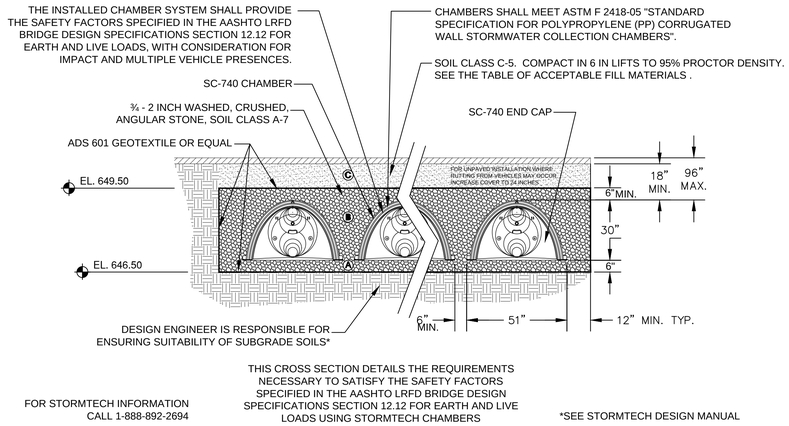

SC-740 TYPICAL CROSS SECTION

ACCEPTABLE FILL MATERIALS - STORMTECH SC-740 CHAMBER SYSTEMS

MATERIAL LOCATION	DESCRIPTION	SOIL CLASS	COMPACTION/DENSITY REQUIREMENT
FILL MATERIAL FROM 18" TO GRADE ABOVE CHAMBERS	ANY SOIL/ROCK MATERIALS, NATIVE SOILS OR PER ENGINEER'S PLANS. CHECK PLANS FOR PAVEMENT SUBGRADE REQUIREMENTS.	G-1	PREPARE PER ENGINEER'S PLANS. PAVED INSTALLATIONS MAY HAVE STRINGENT MATERIAL AND PREPARATION REQUIREMENTS.
Ⓒ FILL MATERIAL FOR 6" TO 18" ELEVATION ABOVE CHAMBERS (24" FOR UNPAVED INSTALLATIONS)	GRANULAR WELL-GRADED SOIL/AGGREGATE MIXTURES, <35% FINES.	C-5	COMPACT IN 6" LIFTS TO A MINIMUM 95% STANDARD PROCTOR DENSITY. ROLLER GROSS VEHICLE WEIGHT NOT TO EXCEED 12,000 LBS. DYNAMIC FORCE NOT TO EXCEED 20,000 LBS.
Ⓑ EMBEDMENT STONE SURROUNDING AND TO A 6" ELEVATION ABOVE CHAMBERS	WASHED ANGULAR STONE WITH THE MAJORITY OF PARTICLES BETWEEN ¾ - 2 INCH	A-7	NO COMPACTION REQUIRED
Ⓐ FOUNDATION STONE BELOW CHAMBERS	WASHED ANGULAR STONE WITH THE MAJORITY OF PARTICLES BETWEEN ¾ - 2 INCH	A-7	PLATE COMPACT OR ROLL TO ACHIEVE A 95% STANDARD PROCTOR DENSITY

STORMTECH ACCEPTABLE FILL MATERIALS

NOTES:
1. ALL DESIGN SPECIFICATIONS FOR STORMTECH CHAMBERS SHALL BE IN ACCORDANCE WITH THE STORMTECH DESIGN MANUAL.
2. THE INSTALLATION OF STORMTECH CHAMBERS SHALL BE IN ACCORDANCE WITH THE LATEST STORMTECH INSTALLATION INSTRUCTIONS.
3. THE CONTRACTOR IS ADVISED TO REVIEW AND UNDERSTAND THE INSTALLATION INSTRUCTIONS PRIOR TO BEGINNING SYSTEM INSTALLATION. CALL **1-888-892-2694** OR VISIT **WWW.STORMTECH.COM** TO RECEIVE A COPY OF THE LATEST STORMTECH INSTALLATION INSTRUCTIONS.
4. CHAMBERS SHALL MEET THE DESIGN REQUIREMENTS AND SAFETY FACTORS SPECIFIED IN SECTION 12.12 OF THE LATEST EDITION OF THE AASHTO LRFD BRIDGE DESIGN SPECIFICATIONS.

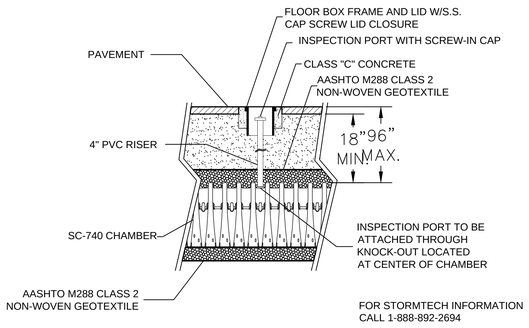

STORMTECH INSPECTION PORT DETAIL

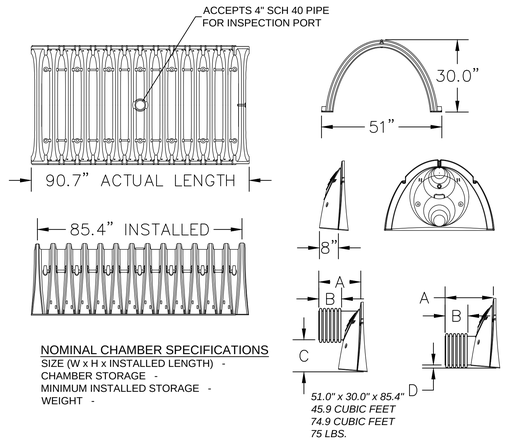

NOMINAL CHAMBER SPECIFICATIONS
SIZE (W x H x INSTALLED LENGTH) - *51.0" x 30.0" x 85.4"*
CHAMBER STORAGE - *45.9 CUBIC FEET*
MINIMUM INSTALLED STORAGE - *74.9 CUBIC FEET*
WEIGHT - *75 LBS.*

STUBS AT TOP OF END CAP FOR PARTS NUMBERS ENDING WITH "T"

STUBS AT BOTTOM OF END CAP FOR PARTS NUMBERS ENDING WITH "B"

PART #	CHAMBER	PIPE SIZE	A	B	C	D
SC740EPE06T	SC 740	6 in (150 mm)	10.90 in (277 mm)	3.85 in (98 mm)	18.50 in (470 mm)	N/A
SC740EPE06B	SC 740	6 in (150 mm)	10.90 in (277 mm)	3.85 in (98 mm)	N/A	0.50 in (13 mm)
SC740EPE12T	SC 740	12 in (300 mm)	14.70 in (373 mm)	7.70 in (196 mm)	12.50 in (318 mm)	N/A
SC740EPE12B	SC 740	12 in (300 mm)	14.70 in (373 mm)	7.70 in (196 mm)	N/A	1.20 in (30 mm)
SC740EPE15T	SC 740	15 in (375 mm)	18.40 in (467 mm)	10.36 in (263 mm)	9.00 in (229 mm)	N/A
SC740EPE15B	SC 740	15 in (375 mm)	18.40 in (467 mm)	10.36 in (263 mm)	N/A	1.30 in (33 mm)
SC740EPE18T	SC 740	18 in (460 mm)	19.70 in (500 mm)	10.72 in (272 mm)	5.00 in (127 mm)	N/A
SC740EPE18B	SC 740	18 in (460 mm)	19.70 in (500 mm)	10.72 in (272 mm)	N/A	1.60 in (41 mm)
SC740EPE24B	SC 740	24 in (600 mm)	18.50 in (470 mm)	9.45 in (240 mm)	N/A	0.10 in (3 mm)

NOTE: ALL DIMENSIONS ARE NOMINAL

ALL STUBS, EXCEPT FOR THE SC740EPE24B ARE PLACED AT BOTTOM OF END CAP SUCH THAT THE OUTSIDE DIAMETER OF THE STUB IS FLUSH WITH THE BOTTOM OF THE END CAP. FOR ADDITIONAL INFORMATION CONTACT STORMTECH AT 1-888-892-2694.

★ FOR THE SC740EPE24B THE 24" STUB LIES BELOW THE BOTTOM OF THE END CAP APPROXIMATELY 1.75". BACKFILL MATERIAL SHOULD BE REMOVED FROM BELOW THE N-12 STUB SO THAT THE FITTING SETS LEVEL.

TECHNICAL DETAILS

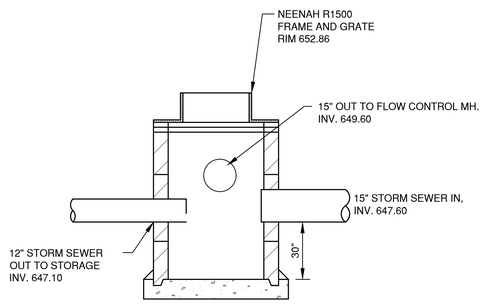

DISCHARGE CONTROL MH (MH 8)

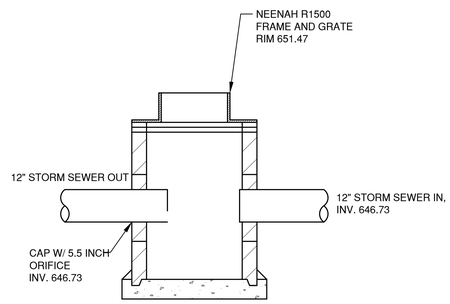

DISCHARGE CONTROL MH (MH 9)

Robert E. Lee & Associates, Inc.
ENGINEERING, SURVEYING, ENVIRONMENTAL SERVICES
1250 CENTRAL CENTRE BOULEVARD HOBART, WI 54155
920-662-9641 www.reinc.com

design matters

somerville
architects | engineers
Somerville Inc. | 2100 Riverside Drive, Green Bay, WI 54301-2390
P 920.437.8136 | F 920.437.1131 | www.somervilleinc.com

SCALE VERIFICATION 1" AT FULL SCALE

Revisions	Description	Date

This drawing may not be reproduced without the written permission of Somerville, Inc. Reproduction of these drawings may be established by visual comparison. ©Somerville, Inc. 2016
Plansqueeze@somervilleinc.com

UNDERGROUND CHAMBER AND CONTROL MANHOLE DETAILS

PROPOSED ADDITION AND REMODEL
CEREBRAL PALSY, INC.
GREEN BAY, WISCONSIN

Date: 03/13/2017
Project No. 6450
Sheet: C108

File: R:\12001-12250\12250A\DWG\DETAILS.dwg
Plot Date: Mar 08, 2017 - 10:29am

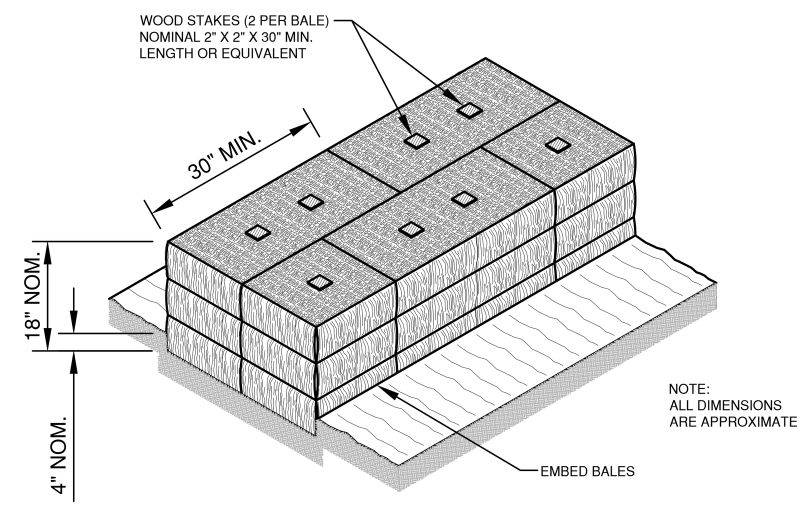

SECTION A-A

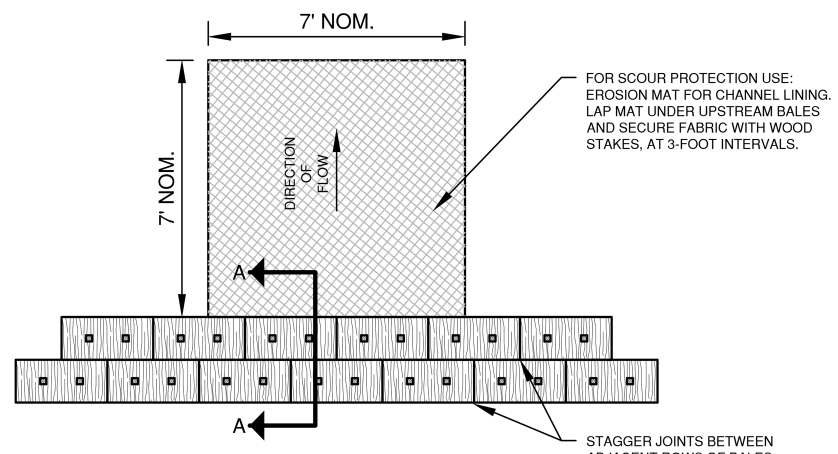

PLAN VIEW

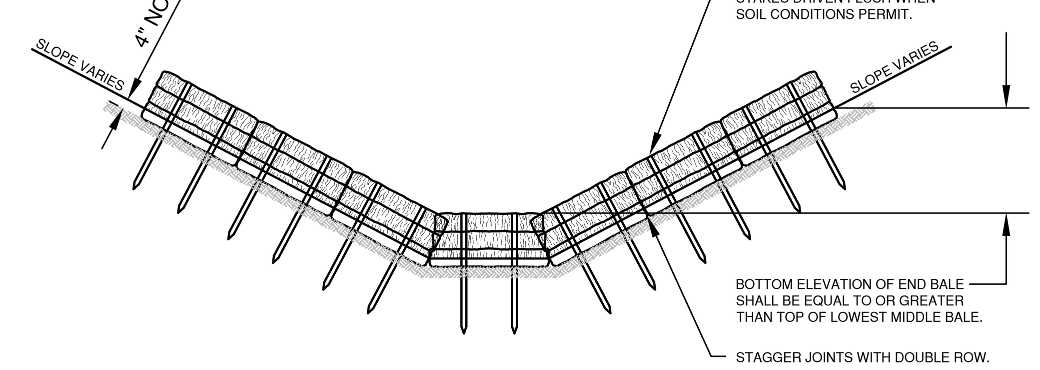

FRONT ELEVATION

TEMPORARY DITCH CHECK USING EROSION BALES
TYPE A

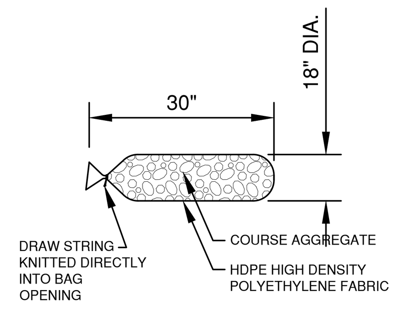

FILTER BAG DETAIL

COURSE AGGREGATE INFORMATION

SIEVE SIZE	SIZE NO. AASHTO No. 67 (1)
2 INCH (50 mm)	-
1 1/2 INCH (37.5mm)	-
1 INCH (25.0 mm)	100
3/4 INCH (19.0mm)	90-100
3/8 INCH (9.5mm)	20-55
No. 4 (4.75mm)	0-10
No. 8 (2.36mm)	0-5

(1) SIZE No. ACCORDING TO AASHTO M 43

NOTES:

18" X 30" ROCK FILLED FILTER BAG SHALL BE COMPRISED OF THE FOLLOWING:
HDPE HIGH DENSITY POLYETHYLENE
HDPE HIGH DENSITY POLYETHYLENE DRAW STRING KNITTED DIRECTLY INTO BAG OPENING.
80% FABRIC CLOSURE WITH APPARENT OPENING SIZE NO LARGER THAN 1/8 " X 1/8 "
ROLLED SEAM USING A MINIMUM OF 480 DENIER POLYESTER SEWING YARN FOR STRENGTH AND DURABILITY.

USE WELL GRADED COURSE AGGREGATE CONFORMING TO THE FOLLOWING GRADATION REQUIREMENTS

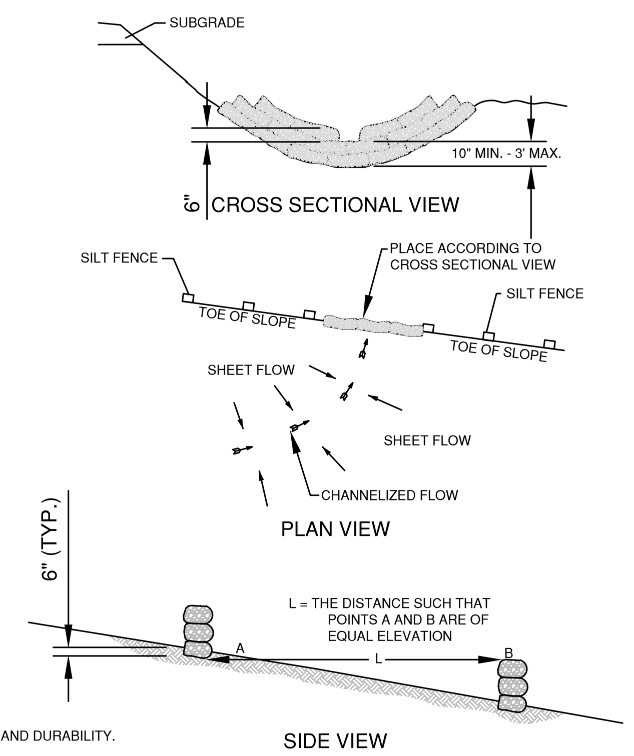

DITCH CHECK DETAIL

ROCK FILLED EROSION CONTROL BAGS
TYPE B

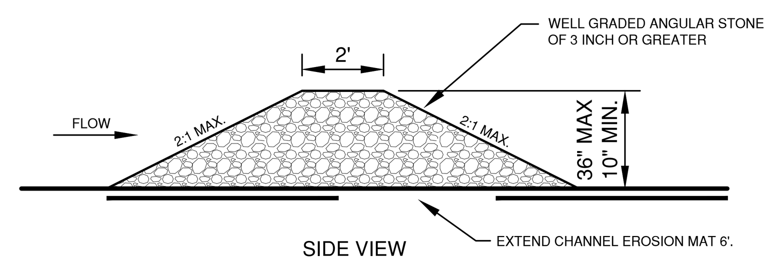

SIDE VIEW

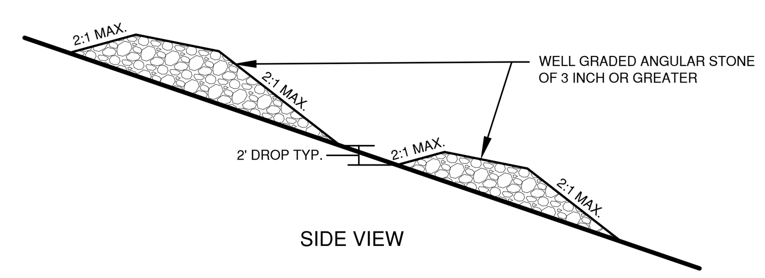

SIDE VIEW

TEMPORARY DITCH CHECK USING STONE
TYPE C

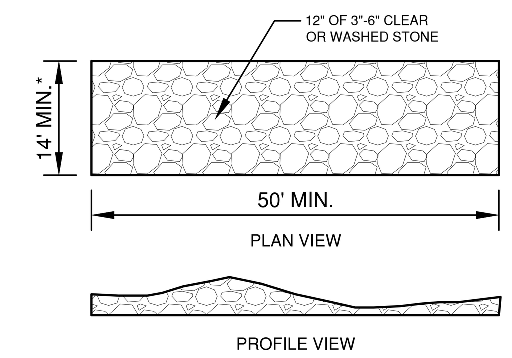

*14' MIN. OR FULL WIDTH OF THE EGRESS POINT.
REFERENCE WDNR TECHNICAL STANDARD 1057.

TRACKING PAD DETAIL
(IF APPLICABLE)

INLET PROTECTION NOTES:

MANUFACTURED ALTERNATIVES APPROVED AND LISTED ON THE WDOT PRODUCT ACCEPTABILITY LIST MAY BE SUBSTITUTED.

WHEN REMOVING OR MAINTAINING INLET PROTECTION, CARE SHALL BE TAKEN SO THAT THE SEDIMENT TRAPPED ON THE GEOTEXTILE FABRIC DOES NOT FALL INTO THE INLET. ANY MATERIAL FALLING INTO THE INLET SHALL BE REMOVED IMMEDIATELY.

1. FINISHED SIZE, INCLUDING FLAP POCKETS WHERE REQUIRED, SHALL EXTEND A MINIMUM OF 10" AROUND THE PERIMETER TO FACILITATE MAINTENANCE OR REMOVAL.
2. FOR INLET PROTECTION, TYPE C (WITH CURB BOX), AN ADDITIONAL 18" OF FABRIC IS WRAPPED AROUND THE WOOD AND SECURED WITH STAPLES. THE WOOD SHALL NOT BLOCK THE ENTIRE HEIGHT OF THE CURB BOX OPENING.
3. FLAP POCKETS SHALL BE LARGE ENOUGH TO ACCEPT WOOD 2"X4".
4. SIDE FLAPS SHALL BE A MAXIMUM OF 2" LONG. FOLD THE FABRIC OVER AND REINFORCE WITH MULTIPLE STITCHES.

INSTALLATION NOTES:
TYPE "B" & "C"

TRIM EXCESS FABRIC IN THE FLOW LINE TO WITHIN 3" OF THE GRATE.

DEMONSTRATE A METHOD OF MAINTENANCE, USING A SEWN FLAP, HAND HOLDS OR OTHER METHOD TO PREVENT ACCUMULATED SEDIMENT FROM ENTERING THE INLET.

TYPE "D"

DO NOT INSTALL INLET PROTECTION TYPE D IN INLETS SHALLOWER THAN 30" MEASURED FROM THE BOTTOM OF THE INLET TO THE TOP OF THE GRATE.

TRIM EXCESS FABRIC IN THE FLOW LINE TO WITHIN 3" OF THE GRATE.

THE INSTALLED BAG SHALL HAVE A MINIMUM SIDE CLEARANCE, BETWEEN THE INLET WALLS AND THE BAG, MEASURED AT THE BOTTOM OF THE OVERFLOW HOLES, OF 3". WHERE NECESSARY, CINCH THE BAG, USING PLASTIC ZIP TIES, TO ACHIEVE THE 3" CLEARANCE, THE TIES SHALL BE PLACED AT THE MAXIMUM OF 4" FROM THE BOTTOM OF THE BAG.

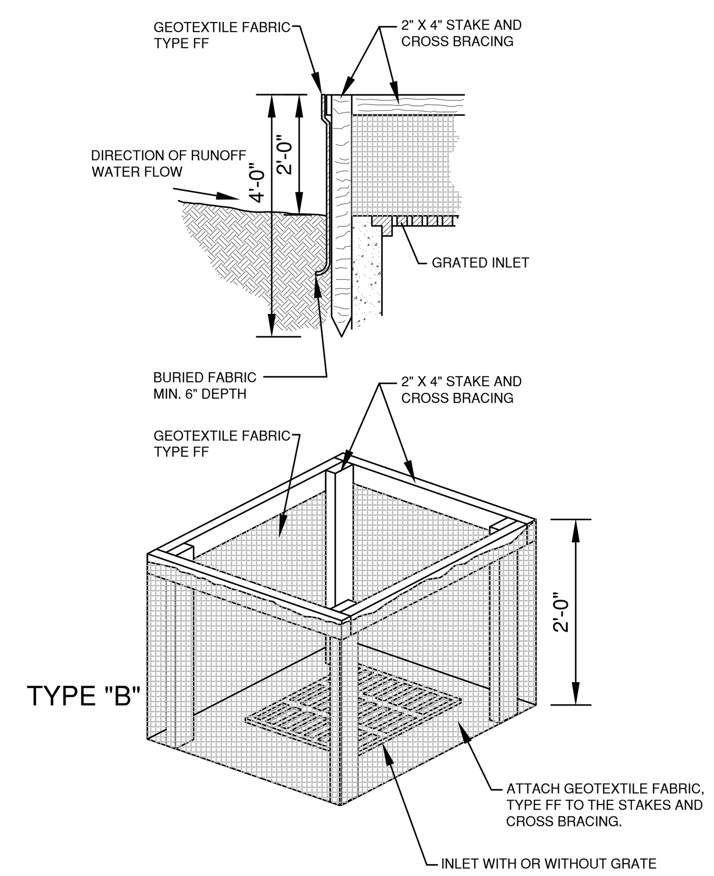

INLET PROTECTION, TYPE A

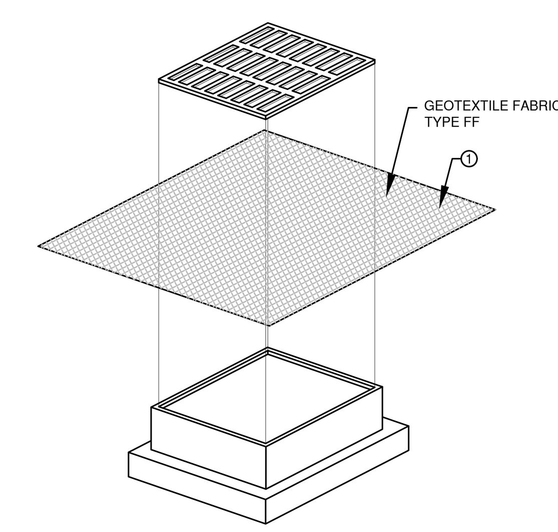

INLET PROTECTION, TYPE B
(WITHOUT CURB BOX)
(CAN BE INSTALLED IN ANY INLET WITHOUT A CURB BOX)

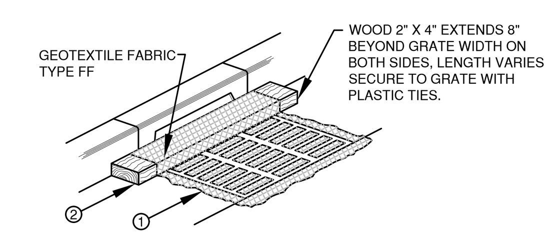

INLET PROTECTION, TYPE C
(WITH CURB BOX)

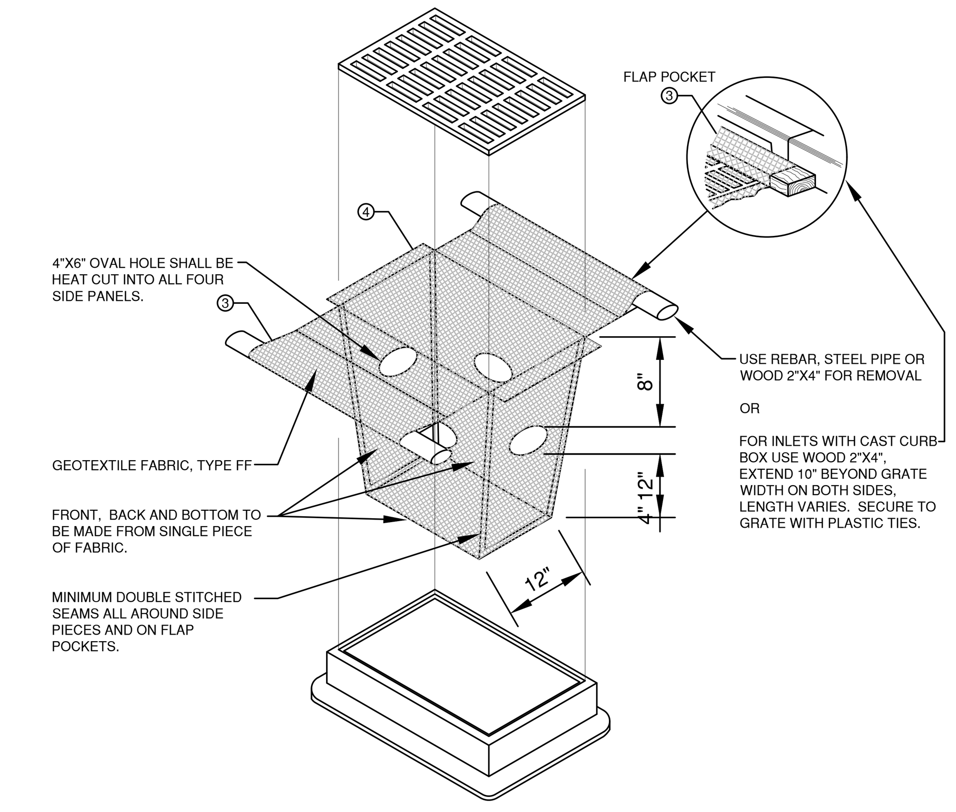

INLET PROTECTION, TYPE D
(CAN BE INSTALLED IN ANY INLET TYPE WITH OR WITHOUT CURB BOX AS PER NOTE "2")

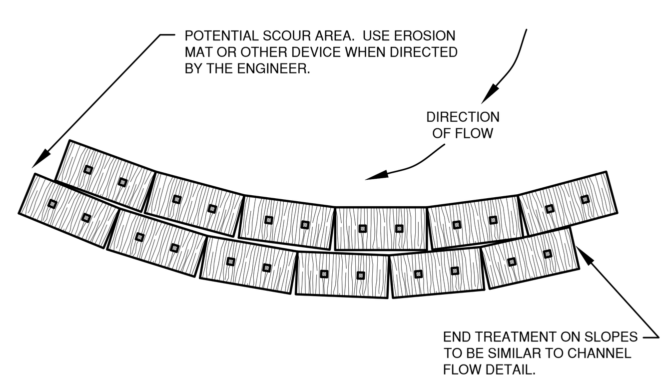

PLAN VIEW
(WHEN ALTERING THE DIRECTION OF FLOW)

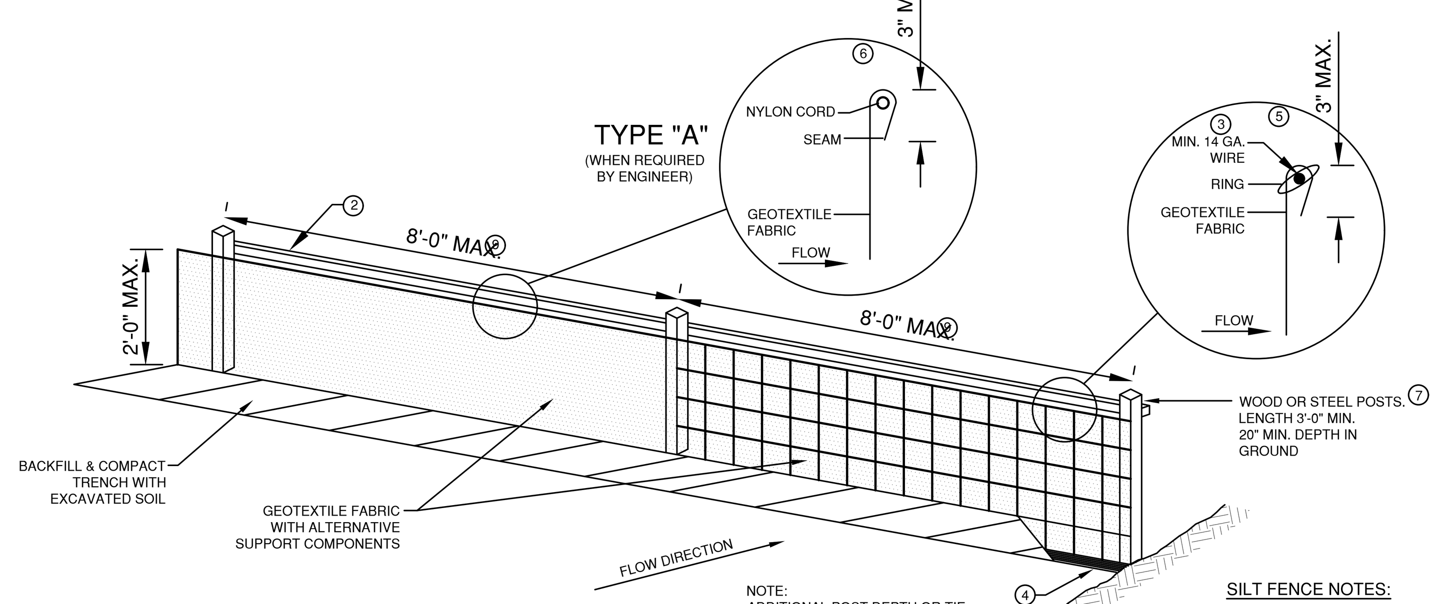

SILT FENCE DETAIL

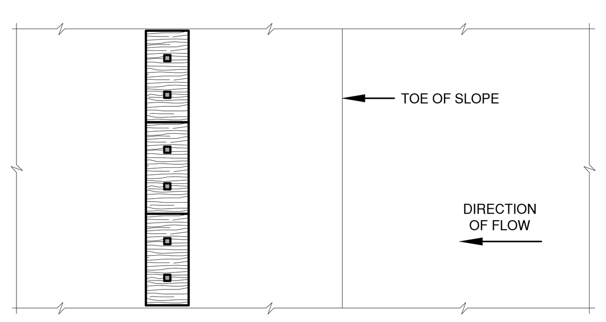

PLAN VIEW

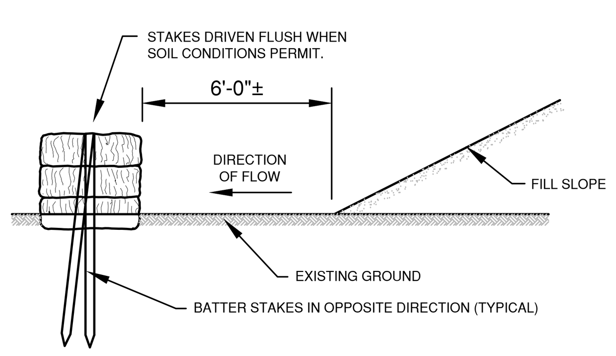

FRONT ELEVATION
WHEN EXISTING GROUND SLOPES AWAY FROM FILL SLOPE

EROSION BALES FOR SHEET FLOW

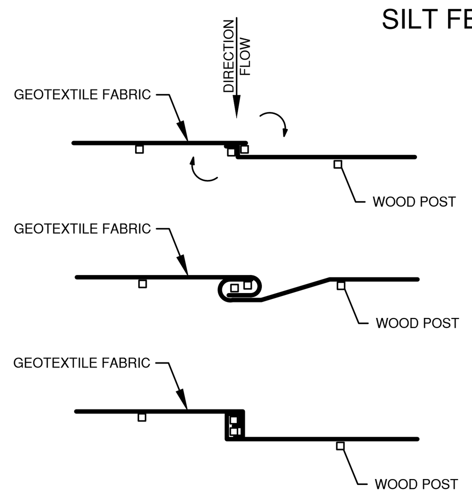

TWIST METHOD (8)

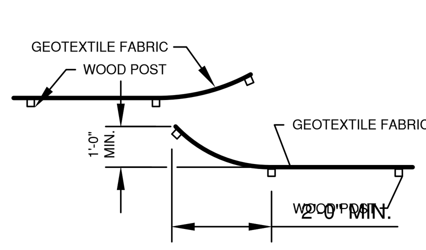

HOOK METHOD (8)

JOINING TWO LENGTHS OF SILT FENCE

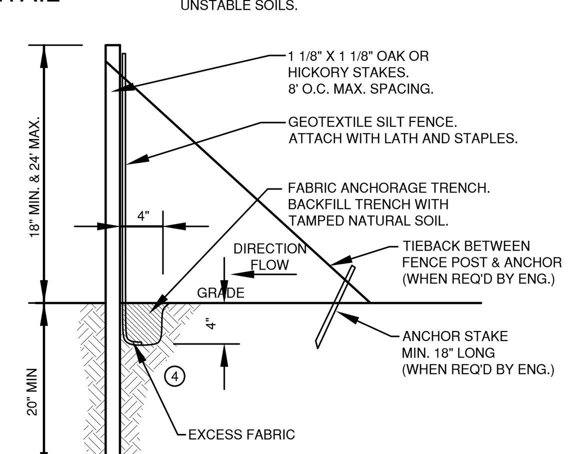

SILT FENCE TIE BACK

SILT FENCE NOTES:

1. EROSION CONTROL SHALL BE PROVIDED IN ACCORDANCE WITH WDNR TECHNICAL STANDARD.
2. CROSS BRACE WITH 2" X 4" WOODEN FRAME OR EQUIVALENT AT TOP OF POSTS AS DIRECTED BY THE ENGINEER.
3. MINIMUM 14 GAUGE WIRE REQUIRED, FOLD FABRIC 3" OVER THE WIRE AND STAPLE OR PLACE WIRE RINGS ON 12" C.C.
4. EXCAVATE A TRENCH A MINIMUM OF 4" WIDE & 6" DEEP TO BURY AND ANCHOR THE GEOTEXTILE FABRIC. FOLD MATERIAL TO FIT TRENCH AND BACKFILL & COMPACT TRENCH WITH EXCAVATED SOIL.
5. WIRE SUPPORT FENCE SHALL BE 14 GAUGE MINIMUM WOVEN WIRE WITH A MAXIMUM MESH SPACING OF 6". SECURE TOP OF GEOTEXTILE FABRIC TO TOP OF FENCE WITH STAPLES OR WIRE RINGS AT 12" C.C. (TYPE B)
6. GEOTEXTILE FABRIC SHALL BE REINFORCED WITH AN INDUSTRIAL POLYPROPYLENE NETTING WITH A MAXIMUM MESH SPACING OF 3/4" OR EQUAL. A HEAVY DUTY NYLON TOP SUPPORT CORD OR EQUIVALENT IS REQUIRED. (TYPE A)
7. STEEL POSTS SHALL BE STUDDED "TEE" OR "U" TYPE WITH A MINIMUM WEIGHT OF 1.28 LBS./LIN. FT. (WITHOUT ANCHOR) FIN ANCHORS SUFFICIENT TO RESIST POST MOVEMENT ARE REQUIRED. WOOD POSTS SHALL BE A MINIMUM SIZE OF 1 1/8" X 1 1/8" OF OAK OR HICKORY.
8. CONSTRUCT SILT FENCE FROM A CONTINUOUS ROLL, IF POSSIBLE, BY CUTTING LENGTHS TO AVOID JOINTS. IF A JOINT IS NECESSARY, USE ONE OF THE FOLLOWING TWO METHODS: A.) TWIST METHOD -- OVERLAP THE END POSTS AND TWIST, OR ROTATE, AT LEAST 180 DEGREES, B:) HOOK METHOD -- HOOK THE END OF EACH SILT FENCE LENGTH.
9. THE MAXIMUM SPACING OF POSTS FOR WOVEN FABRIC SILT FENCE SHALL BE 8 FEET AND FOR NON-WOVEN FABRIC, 3 FEET.

EROSION CONTROL SHEET FLOW NOTES:

1. ANY SOIL STOCKPILED THAT REMAINS FOR MORE THAN 7 DAYS SHALL BE COVERED OR TREATED WITH STABILIZATION PRACTICES SUCH AS TEMPORARY OR PERMANENT SEEDING AND MULCHING.
2. A MINIMUM OF 4 INCHES OF TOPSOIL MUST BE APPLIED TO ALL AREAS TO BE SEEDED OR SODDED.
3. ALL WASTE AND UNUSED BUILDING MATERIALS (INCLUDING GARBAGE, DEBRIS, CLEANING WASTES, WASTEWATER, TOXIC MATERIALS, OR HAZARDOUS MATERIALS) SHALL BE PROPERLY DISPOSED OF AND NOT ALLOWED TO BE CARRIED OFF-SITE BY RUNOFF OR WIND.
4. ALL OFF-SITE SEDIMENT DEPOSITS OCCURRING AS A RESULT OF CONSTRUCTION WORK OR A STORM EVENT SHALL BE CLEANED UP BY THE END OF EACH DAY. **FLUSHING SHALL NOT BE ALLOWED.**
5. ANY SOIL EROSION THAT OCCURS AFTER FINAL GRADING AND/OR THE APPLICATION OF STABILIZATION MEASURES MUST BE REPAIRED AND THE STABILIZATION WORK REDONE.
6. FOR ANY DISTURBED AREA THAT REMAINS INACTIVE FOR GREATER THAN 7 WORKING DAYS, OR WHERE GRADING WORK EXTENDS BEYOND THE PERMANENT SEEDING DEADLINES, THE SITE MUST BE TREATED WITH TEMPORARY STABILIZATION MEASURES SUCH AS SOIL TREATMENT, TEMPORARY SEEDING AND/OR MULCHING.
7. ALL TEMPORARY EROSION CONTROL PRACTICES SHALL BE MAINTAINED UNTIL THE SITE IS STABILIZED WITH 70% VEGETATION AND A NOTICE OF TERMINATION HAS BEEN APPROVED BY THE DNR.
8. WIND EROSION SHALL BE KEPT TO A MINIMUM DURING CONSTRUCTION. WATERING, MULCH OR A TACKING AGENT MAY NEED TO BE UTILIZED TO PROTECT NEARBY RESIDENCES/WATER RESOURCES.
9. CONTRACTOR RESPONSIBLE FOR MAINTAINING ALL THE EROSION CONTROL MEASURES IN CONFORMANCE WITH THE WDNR CONSERVATION PRACTICE STANDARDS, LATEST EDITION.
10. UPON COMPLETION OF STORM INLET CONSTRUCTION, INSTALL STORM DRAIN INLET PROTECTION FOR CONSTRUCTION SITE AS SPECIFIED.
11. FINE SEDIMENT ACCUMULATIONS SHALL BE CLEANED FROM STREETS, PRIVATE DRIVES, OR PARKING AREAS BY MANUAL OR MECHANICAL SWEEPING A MINIMUM OF ONCE PER WEEK AND BEFORE ALL IMMINENT RAINS.
12. EROSION AND SEDIMENT CONTROL STRUCTURES SHALL BE INSPECTED WEEKLY AND WITHIN 24 HOURS OF RAINFALL OF 0.5 INCH OR MORE.

File: R:\1200\1228\1228054\DWG\DETAILS.dwg
Plot Date: Mar 08, 2017 - 10:27am

Robert E. Lee & Associates, Inc.
ENGINEERING, SURVEYING, ENVIRONMENTAL SERVICES
1250 CENTENNIAL CENTRE BOULEVARD HOBART, WI 54155
920-662-9641 www.releeinc.com

design matters

somerville
architects | engineers
Somerville Inc. | 2100 Riverside Drive, Green Bay, WI 54301-2390
P 920.437.8136 | F 920.437.1131 | www.somervilleinc.com

SCALE VERIFICATION
1" AT FULL SCALE

Revisions	Description	Date

This drawing may not be reproduced without the written permission of Somerville, Inc.
Permission or copies of this drawing may be obtained by emailing:
Planrequests@somervilleinc.com
©Somerville, Inc. 2016

EROSION CONTROL DETAILS

PROPOSED ADDITION AND REMODEL
CEREBRAL PALSY, INC.
GREEN BAY, WISCONSIN

Date:
03/13/2017
Project No.
6450
Sheet:
C109

STH "172"

S. WEBSTER AVENUE
CTH "X"

12' UTILITY EASEMENT

LANDSCAPING

BUS STOP

EX. CONC. STEPS

GREEN SPACE

LOT 2
HERITAGE PROFESSIONAL OFFICE COMPLEX

EX. BUILDING

6' UTILITY EASEMENT

BLDG.

55' RADIUS

AREA WELL

OVERHANG ENTRANCE

10' SANITARY SEWER EASEMENT

10' STORM SEWER EASEMENT

(3) PARDON ME DAYLILIES

(1) GRASS, FLAME

EX. BLOCK RETAINING WALL

EX. LANDSCAPING

10' SURFACE WATER AND STORM SEWER EASEMENT

10' STORM SEWER EASEMENT

10' WATER EASEMENT

26' INGRESS/EGRESS EASEMENT

GREEN SPACE

6' UTILITY AND WATER EASEMENT

EX. PLAYGROUND

LANDSCAPING

6' UTILITY EASEMENT

6' UTILITY EASEMENT

LOT 1
57CSM62

10' SANITARY SEWER EASEMENT

12' UTILITY EASEMENT

10' WATER SERVICE EASEMENT

(11) GRASS, FLAME

(10) STORMY SEAS CORAL BELLS

REPLACE EX. LANDSCAPING AS NEEDED

EX. BLOCK RETAINING WALL

REMOVE AND REPLACE EX. LANDSCAPING

(13) PARDON ME DAYLILIES

PROPOSED BUILDING ADDITION
21,404 S.F.
FF EL. ±654.36 (MATCH EXISTING)

(7) GRASS, FLAME

(7) STORMY SEAS CORAL BELLS

(7) PARDON ME DAYLILIES

EX. PLAYGROUND

WAUBENOOR COURT

ORCHARD LANE

10' STORM SEWER EASEMENT

10' WATER SERVICE EASEMENT

LOT 1
HERITAGE PROFESSIONAL OFFICE COMPLEX

10' BUILDING SETBACK LINE

(15) ACER RUBRUM TREE (TYP.)

LOT 2
57CSM62

BLDG.

CAUTION

"UNDERGROUND UTILITIES MAY EXIST IN THIS LOCATION BUT WERE NOT MARKED BY THE DIGGERS HOTLINE, TICKET"

33' WIDE W. BELL UTILITY EASEMENT DOC. NO. 1544687

LOT 1
HERITAGE PROFESSIONAL OFFICE COMPLEX

SILT FENCE (TYP)

INGRESS/EGRESS EASEMENT DOC. NO. 2547912

CURVE TABLE

Curve	Delta	Radius	Length	Chord Direction	Chord Length	Tangent Bearing
C-1	01°52'27"	5799.58'	189.71'	N27°29'52.5"E	189.70'	S61°33'54"W
C-2	90°00'00"	55.00'	86.39'	S71°07'21"W	77.78'	S63°52'39"E

NORTH

0' 20' 40'
SCALE IN FEET

File: R:\1200\1228\1228054\DWG\1228054.dwg
Plot Date: Mar 13, 2017 - 4:36pm

Robert E. Lee & Associates, Inc.
ENGINEERING, SURVEYING, ENVIRONMENTAL SERVICES
1250 CENTRAL CENTRE BOULEVARD HOBART, WI 54155
920-662-9641 www.reinc.com

design matters

somerville
architects | engineers
Somerville Inc. | 2100 Riverside Drive, Green Bay, WI 54301-2390
P 920.437.8136 | F 920.437.1131 | www.somervilleinc.com

SCALE VERIFICATION
1" AT FULL SCALE

Revisions	Description	Date

This drawing may not be reproduced without the written permission of Somerville, Inc. Reproduction of this drawing may be established by the presence of this notice.
© Somerville, Inc. 2016

LANDSCAPING PLAN

PROPOSED ADDITION AND REMODEL
CEREBRAL PALSY, INC.
GREEN BAY, WISCONSIN

Date:
03/13/2017
Project No.
6450
Sheet:
L100

PARTITION TYPES:

EXTERIOR:

E1 TYPICAL 1'-3" CAVITY WALL CONSTRUCTION
- 4" STANDARD BRICK.
- AIR SPACE
- 2" RIGID INSULATION
- FLUID APPLIED AIR/VAPOR BARRIER
- 1/2" EXTERIOR GYPSUM SHEATHING
- 6" METAL STUDS AT 16" O.C.
- 5/8" GYPSUM BOARD

E2 TYPICAL METAL PANEL WALL CONSTRUCTION
- CORRUGATED METAL WALL PANEL
- AIR INFILTRATION BARRIER
- 1/2" PLYWOOD SHEATHING
- 2" RIGID INSULATION
- FLUID APPLIED AIR/VAPOR BARRIER
- 1/2" EXTERIOR GYPSUM SHEATHING
- 6" METAL STUDS AT 16" O.C.
- 5/8" GYPSUM BOARD

E3 TYPICAL MASONRY VENEER WALL CONSTRUCTION
- 4" STANDARD BRICK.
- AIR SPACE
- 2" RIGID INSULATION
- FLUID APPLIED AIR BARRIER
- 12" CMU W/ HORIZ. R/F AT 16" O.C.

MASONRY:

B8 - 8" CMU W/ HORIZ. R/F AT 16" O.C.

B8-1 - 8" CMU W/ HORIZ. R/F AT 16" O.C.
ONE HOUR RATED CONSTRUCTION
(U.L. DESIGN NO. U905)

B12 - 12" CMU W/ HORIZ. R/F AT 16" O.C.

B12-1 - 12" CMU W/ HORIZ. R/F AT 16" O.C.
ONE HOUR RATED CONSTRUCTION
(U.L. DESIGN NO. U905)

B12-3 - 12" CMU FIREWALL W/ HORIZ. R/F AT 16" O.C.
THREE HOUR RATED CONSTRUCTION
(U.L. DESIGN NO. U905)

METAL STUDS:

S1-F - 5/8" IMPACT RESISTANT GYPSUM BOARD
- 1 1/2" METAL STUDS AT 16" O.C.

S2-F - 5/8" IMPACT RESISTANT GYPSUM BOARD
- 2 1/2" METAL STUDS AT 16" O.C.

S3-F - 5/8" IMPACT RESISTANT GYPSUM BOARD
- 3 5/8" METAL STUDS AT 16" O.C.

S3-S - 5/8" IMPACT RESISTANT GYPSUM BOARD
- 3 5/8" METAL STUDS AT 16" O.C. W/ 3" SOUND ATTENUATION BLANKETS FULL HEIGHT
- 5/8" IMPACT RESISTANT GYPSUM BOARD

S3-S1 - 5/8" IMPACT RESISTANT GYPSUM BOARD
- 3 5/8" METAL STUDS AT 16" O.C. W/ 3" SOUND ATTENUATION BLANKETS FULL HEIGHT
- 5/8" IMPACT RESISTANT GYPSUM BOARD
- U.L. DESIGN NO. U419 (ONE HOUR CONSTRUCTION)

S6 - 5/8" IMPACT RESISTANT GYPSUM BOARD
- 6" METAL STUDS AT 16" O.C.
- 5/8" IMPACT RESISTANT GYPSUM BOARD

S6-S - 5/8" IMPACT RESISTANT GYPSUM BOARD
- 3 5/8" METAL STUDS AT 16" O.C. EACH SIDE OF A 6" METAL STUD RUNNER WITH STUDS STAGGERED FROM SIDE TO SIDE WITH A 3" SOUND ATTENUATION BLANKET WEAVED AROUND STUDS FULL HEIGHT.
- (2) LAYERS 5/8" IMPACT RESISTANT GYPSUM BOARD

S12 - 5/8" IMPACT RESISTANT GYPSUM BOARD
- 11 5/8" METAL STUDS AT 16" O.C.
- 5/8" IMPACT RESISTANT GYPSUM BOARD

MISC:

LG - 5/8" LAMINATED GYPSUM BOARD

PARTITION TYPES NOTES:

A. CONSTRUCTION IS LISTED IN ORDER FROM SIDE OF WALL THAT TAG IS INDICATED.

B. WALL TYPE SHALL BE CONTINUOUS UNTIL INTERSECTION OF WALL OF DIFFERENT TYPE.

C. ALL INTERIOR WALL SHALL BE TYPE S3-S UNLESS NOTED OTHERWISE.

D. EXTEND WALLS TO UNDERSIDE OF STRUCTURAL DECK ABOVE UNLESS NOTED OTHERWISE.

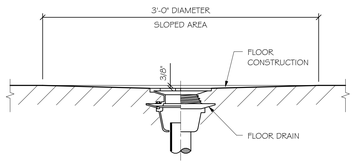

FLOOR DRAIN DETAIL

2 / A102

1 1/2" = 1'-0"

TOP OF INTERIOR STUD PARTITION TERMINATION

1 / A102

1 1/2" = 1'-0"

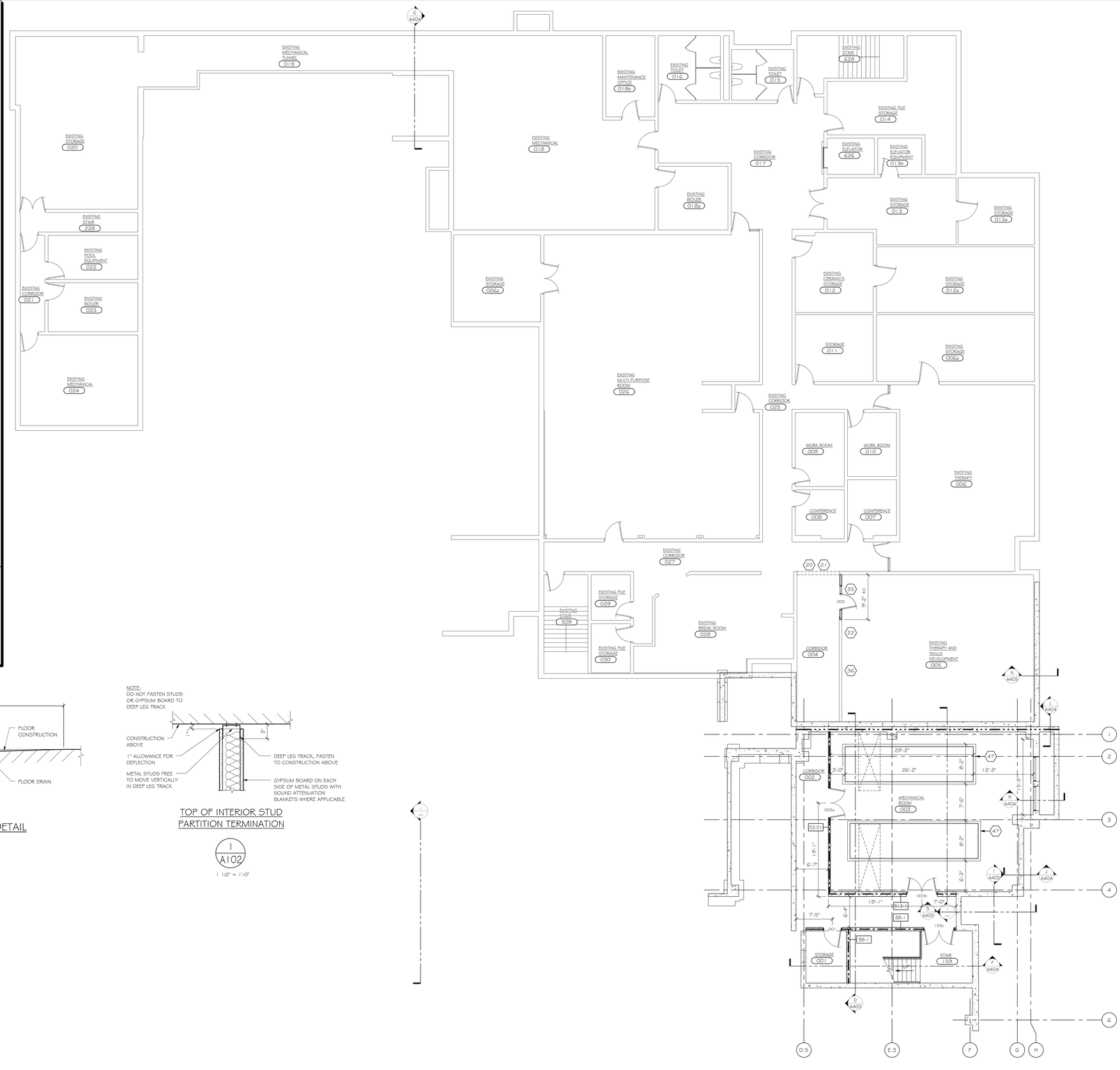

PARTIAL BASEMENT FLOOR PLAN

SCALE: 1/8" = 1'-0"

GENERAL NOTES:

A. SEE SHEETS A701 - A702 FOR CASEWORK, TOILET ROOM AND INTERIOR ELEVATIONS.
B. LOCATE INTERIOR MOVEMENT JOINTS IN CMU AND GYPSUM BOARD PER SPECIFICATIONS.
C. SEE EXTERIOR ELEVATION FOR LOCATION OF MOVEMENT JOINTS (M.J.'s) IN EXTERIOR WALL CONSTRUCTION.
D. PROVIDE BLOCKING AT ALL TV, WALL MOUNTED MONITOR AND WALL MOUNTED COMPUTER LOCATIONS.
E. SEE 1/AG01 FOR MINIMUM ADA REQUIRED CLEARANCES AT DOOR WITH CLOSERS.
F. PB DENOTES PUSH BUTTON CONTROL FOR POWER DOOR OPERATOR.

PLAN NOTES:

20 PATCH FLOORING AND TRANSITIONS AS REQUIRED.
21 MAINTAIN BULKHEAD SOFFIT BELOW CEILING TO AVOID CEILING TRANSITION.
22 REWORK EXISTING CEILING GRID ON EITHER SIDE OF WALL.
35 REUSE EXISTING DOOR AND FRAME WITH SIDELITE.
36 EXTEND EXISTING WALL FULL HEIGHT TO UNDER SIDE OF FLOOR STRUCTURE ABOVE.
47 3 1/2" THICK CONCRETE EQUIPMENT / HOUSEKEEPING PAD - COORDINATE LOCATION AND EXACT SIZE WITH HVAC, PLUMBING, AND ELECTICAL CONTRACTORS.

PARTITION LEGEND

- EXISTING CONSTRUCTION TO REMAIN
- GYPSUM BOARD ON METAL STUDS AT 16" O.C.
- FACE BRICK.
- CMU WALL W/ HORIZ. R/F AT 16" O.C.
- 1 HOUR RATED CONSTRUCTION (U.L. DESIGN NO. UXXX) - SEE WALL TYPES FOR ADDITIONAL INFORMATION.
- 3 HOUR RATED CONSTRUCTION (U.L. DESIGN NO. UXXX) - SEE WALL TYPES FOR ADDITIONAL INFORMATION.

NOTE:
FOR BRACING TOP OF NON-LOAD BEARING WALLS, SEE 1/A102

EQUIPMENT LIST
(EQUIPMENT PROVIDED BY OWNER)

MARK	DESCRIPTION	POWER	DATA	WATER SUPPLY	DRAIN
A	FULL-SIZE REFRIGERATOR	X			
B	UNDER-COUNTER REFRIGERATOR	X			
C	CONVECTION OVEN	X			
D	FULL-SIZE FREEZER	X			
E	UNDER-COUNTER FREEZER	X			
F	MICROWAVE	X			
G	DISHWASHER	X		X	X
H	WASHER	X		X	X
J	DRYER	X			X
K	ADULT CHANGING TABLE	X			
L	COPIER	X	X		

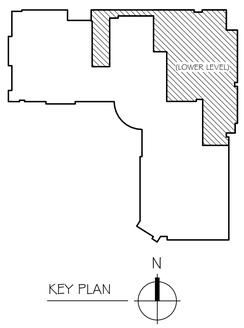

KEY PLAN

design matters
somerville architects | engineers
Somerville Inc. | 2100 Riverside Drive, Green Bay, WI 54301-2390
P 920.437.8136 | F 920.437.1131 | www.somervilleinc.com

Revisions | Description | Date

This drawing may not be reproduced without the written permission of Somerville, Inc. Unauthorized use of this drawing is in violation of applicable laws.
Permissions@somervilleinc.com
© Somerville, Inc. 2016

PROPOSED ADDITION AND REMODEL
CEREBRAL PALSY, INC.
GREEN BAY, WISCONSIN

Date: 03/14/17
Project No. 6450
Sheet **A102**

PRELIMINARY
3/13/2017 10:53:07 AM

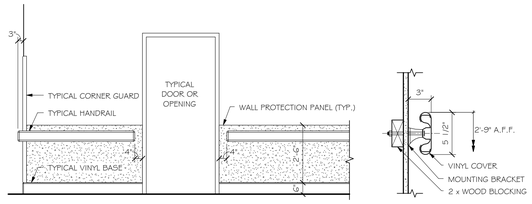

TYPICAL CORRIDOR ELEVATION

TYPICAL HANDRAIL

2 / A103

1 1/2" = 1'-0"

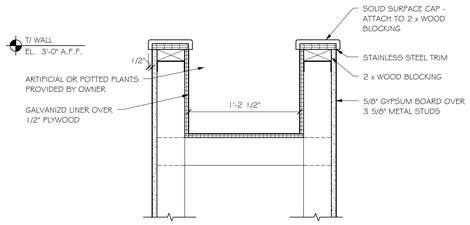

1 / A103

1 1/2" = 1'-0"

GENERAL NOTES:

A. SEE SHEETS A701 - A702 FOR CASEWORK, TOILET ROOM AND INTERIOR ELEVATIONS.
B. LOCATE INTERIOR MOVEMENT JOINTS IN CMU AND GYPSUM BOARD PER SPECIFICATIONS.
C. SEE EXTERIOR ELEVATION FOR LOCATION OF MOVEMENT JOINTS (M.J.'s) IN EXTERIOR WALL CONSTRUCTION.
D. PROVIDE BLOCKING AT ALL TV, WALL MOUNTED MONITOR AND WALL MOUNTED COMPUTER LOCATIONS.
E. SEE 1/AG01 FOR MINIMUM ADA REQUIRED CLEARANCES AT DOOR WITH CLOSERS.
F. (PB) DENOTES PUSH BUTTON CONTROL FOR POWER DOOR OPERATOR.

PLAN NOTES:

1 DASHED LINES INDICATE FURNITURE / EQUIPMENT PROVIDED BY OWNER.
2 NUMBER INDICATES BORROWED LITE - SEE SHEET A601.
9 SEMI-RECESSED FIRE EXTINGUISHER CABINET. EXTINGUISHER SIZED AND PROVIDED BY OWNER.
10 PREP AND PAINT NEW OPENING TO MATCH ADJACENT WALL FINISH.
14 RECEPTION DESK BY OWNER. COORDINATE FINAL DESIGN AND ADJUST FLOORING TRANSITION AS REQUIRED.
15 INFILL OPENINGS IN WALL TO MATCH EXISTING CONSTRUCTION AND FINISH.
16 PATCH, REPAIR, AND FINISH WALL WITH GYPSUM BOARD.
17 PLANTER WITH ARTIFICIAL OR POTTED PLANTS PROVIDED BY OWNER - SEE 1/A103.
27 PLASTIC LAMINATE SILL - TYPICAL AT ALL WINDOWS.
28 HANDRAIL - SEE 2/A103.
37 DASHED CASEWORK PROVIDED BY VENDOR.

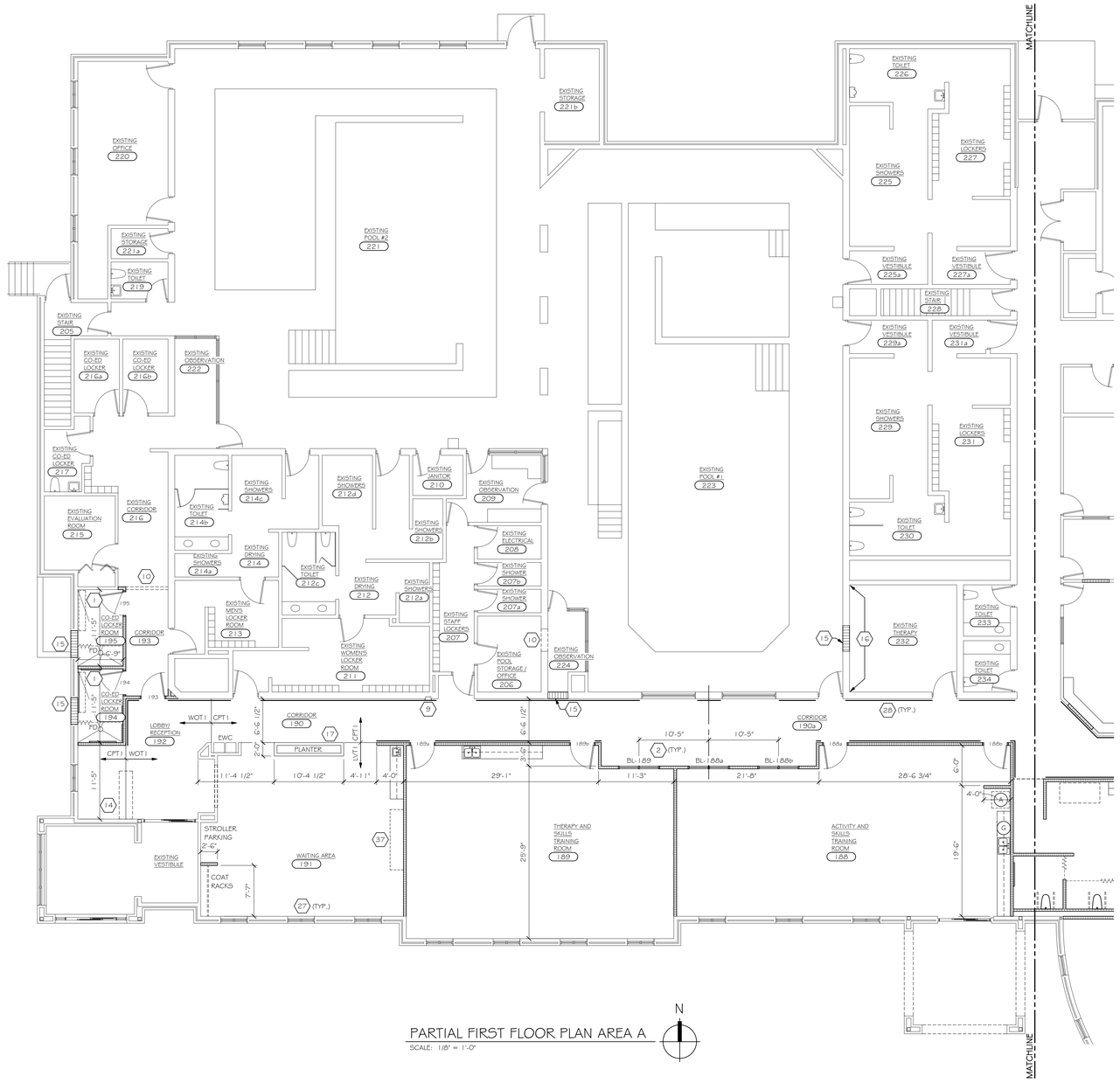

PARTIAL FIRST FLOOR PLAN AREA A

SCALE: 1/8" = 1'-0"

PARTITION LEGEND

- EXISTING CONSTRUCTION TO REMAIN
- GYPSUM BOARD ON METAL STUDS AT 16" O.C.
- FACE BRICK
- CMU WALL W/ HORIZ. R/F AT 16" O.C.
- 1 HOUR RATED CONSTRUCTION (U.L. DESIGN NO. UXXX) - SEE WALL TYPES FOR ADDITIONAL INFORMATION.
- 3 HOUR RATED CONSTRUCTION (U.L. DESIGN NO. UXXX) - SEE WALL TYPES FOR ADDITIONAL INFORMATION.

NOTE:
FOR BRACING TOP OF NON-LOAD BEARING WALLS, SEE 1/A102

EQUIPMENT LIST

(EQUIPMENT PROVIDED BY OWNER)

MARK	DESCRIPTION	POWER	DATA	WATER SUPPLY	DRAIN
A	FULL-SIZE REFRIGERATOR	X			
B	UNDER-COUNTER REFRIGERATOR	X			
C	CONVECTION OVEN	X			
D	FULL-SIZE FREEZER	X			
E	UNDER-COUNTER FREEZER	X			
F	MICROWAVE	X			
G	DISHWASHER	X		X	X
H	WASHER	X		X	X
J	DRYER	X			X
K	ADULT CHANGING TABLE	X			
L	COPIER	X	X		

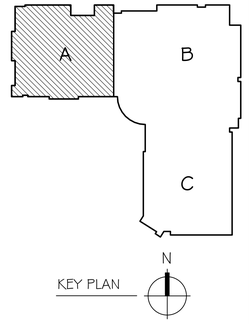

KEY PLAN

design matters.
somerville architects | engineers
Somerville Inc. | 2100 Riverside Drive, Green Bay, WI 54301-2390
P 920.437.8136 | F 920.437.1131 | www.somervilleinc.com

Revisions | Description | Date

This drawing may not be reproduced without the written permission of Somerville, Inc. Visual contact with these drawings shall constitute prima facie evidence of acceptance of these restrictions.
© Somerville, Inc. 2016

PROPOSED ADDITION AND REMODEL
CEREBRAL PALSY, INC.
GREEN BAY, WISCONSIN

Date: 03/14/17
Project No. 6450
Sheet: **A103**

PRELIMINARY

3/13/2017 10:53:08 AM

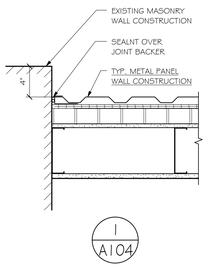

GENERAL NOTES:

A. SEE SHEETS A701 - A702 FOR CASEWORK, TOILET ROOM AND INTERIOR ELEVATIONS.
B. LOCATE INTERIOR MOVEMENT JOINTS IN CMU AND GYPSUM BOARD PER SPECIFICATIONS.
C. SEE EXTERIOR ELEVATION FOR LOCATION OF MOVEMENT JOINTS (M.J.'s) IN EXTERIOR WALL CONSTRUCTION.
D. PROVIDE BLOCKING AT ALL TV, WALL MOUNTED MONITOR AND WALL MOUNTED COMPUTER LOCATIONS.
E. SEE 1/AG01 FOR MINIMUM ADA REQUIRED CLEARANCES AT DOOR WITH CLOSERS.
F. (PB) DENOTES PUSH BUTTON CONTROL FOR POWER DOOR OPERATOR.

PLAN NOTES:

1 DASHED LINES INDICATE FURNITURE / EQUIPMENT PROVIDED BY OWNER.
8 EXISTING CEILING MOUNTED EQUIPMENT SUPPORT HOOKS TO REMAIN.
10 PREP AND PAINT NEW OPENING TO MATCH ADJACENT WALL FINISH.
15 INFILL OPENINGS IN WALL TO MATCH EXISTING CONSTRUCTION AND FINISH.
18 EXISTING AVIARY BY OWNER.
25 NEW STAINED AND STAMPED SLAB.
27 PLASTIC LAMINATE SILL - TYPICAL AT ALL WINDOWS.
28 HANDRAIL - SEE 2/A103.
38 LATERAL FILE PROVIDED BY OWNER.
48 SWING AWAY GRAB BARS BY OWNER - COORDINATE BLOCKING NEEDS.
49 SWING AWAY PRIVACY CURTAIN BY OWNER - COORDINATE BLOCKING NEEDS.
50 42" GRAB BAR.
52 7'-0" PARTIAL HEIGHT WALL.
70 MATCH EXISTING WALL THICKNESS AND ADJACENT FINISHES. FACE BRICK OVER AIR SPACE OVER AIR BARRIER OVER 1/2" GYPSUM SHEATHING OVER 6" LIGHT GAUGE FRAMING WITH FIBERGLASS INSULATION OVER VAPOR BARRIER OVER GYPSUM BOARD.

PARTITION LEGEND

- EXISTING CONSTRUCTION TO REMAIN
- GYPSUM BOARD ON METAL STUDS AT 16" O.C.
- FACE BRICK.
- CMU WALL W/ HORIZ. R/F AT 16" O.C.
- 1 HOUR RATED CONSTRUCTION (U.L. DESIGN NO. UXXX) - SEE WALL TYPES FOR ADDITIONAL INFORMATION.
- 3 HOUR RATED CONSTRUCTION (U.L. DESIGN NO. UXXX) - SEE WALL TYPES FOR ADDITIONAL INFORMATION.

NOTE:
FOR BRACING TOP OF NON-LOAD BEARING WALLS, SEE 1/A102

EQUIPMENT LIST
(EQUIPMENT PROVIDED BY OWNER)

MARK	DESCRIPTION	POWER	DATA	WATER SUPPLY	DRAIN
A	FULL-SIZE REFRIGERATOR	X			
B	UNDER-COUNTER REFRIGERATOR	X			
C	CONVECTION OVEN	X			
D	FULL-SIZE FREEZER	X			
E	UNDER-COUNTER FREEZER	X			
F	MICROWAVE	X			
G	DISHWASHER	X		X	X
H	WASHER	X		X	X
J	DRYER	X			X
K	ADULT CHANGING TABLE	X			
L	COPIER	X	X		

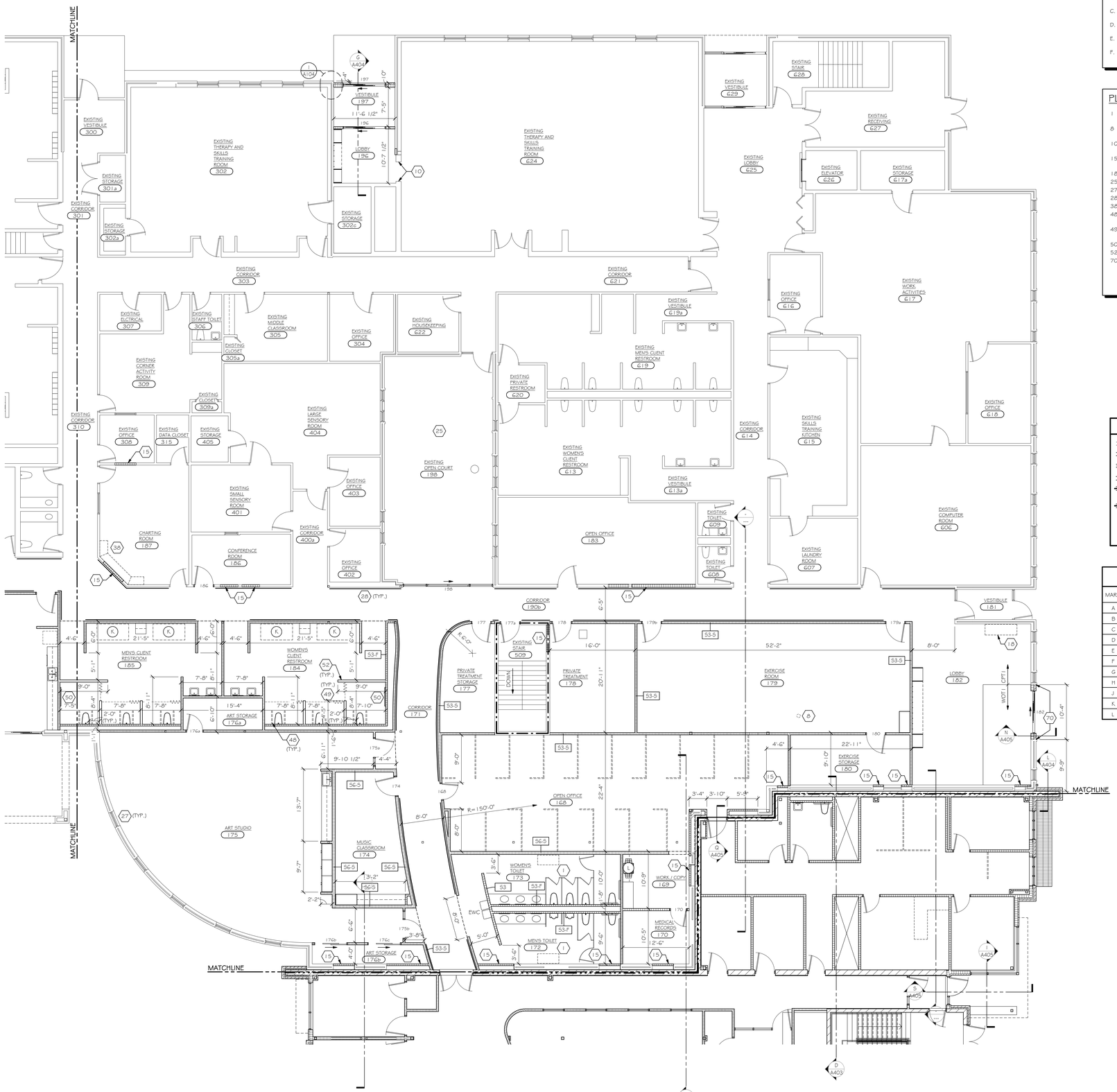

PARTIAL FIRST FLOOR PLAN AREA B
SCALE: 1/8" = 1'-0"

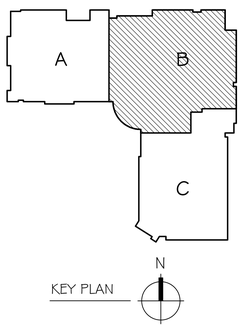

design matters
somerville architects | engineers
Somerville Inc. | 2100 Riverside Drive, Green Bay, WI 54301-2390
P 920.437.8136 | F 920.437.1131 | www.somervilleinc.com

Revisions | Description | Date

This drawing may not be reproduced without the written permission of Somerville, Inc. Visual contact with these plans shall constitute prima facie evidence of acceptance of these restrictions.
© Somerville, Inc. 2016

PROPOSED ADDITION AND REMODEL
CEREBRAL PALSY, INC.
GREEN BAY, WISCONSIN

Date: 03/14/17
Project No. 6450
Sheet: **A104**

PRELIMINARY
3/13/2017 10:53:09 AM

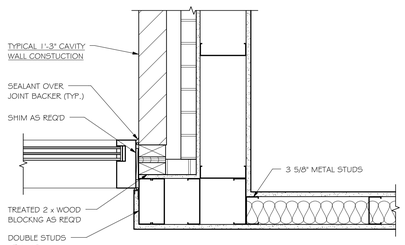

1 A105
1 1/2" = 1'-0"

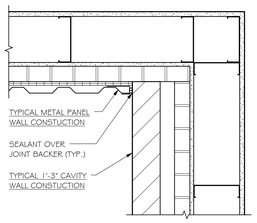

2 A105
1 1/2" = 1'-0"

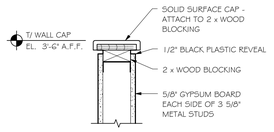

3 A105
1 1/2" = 1'-0"

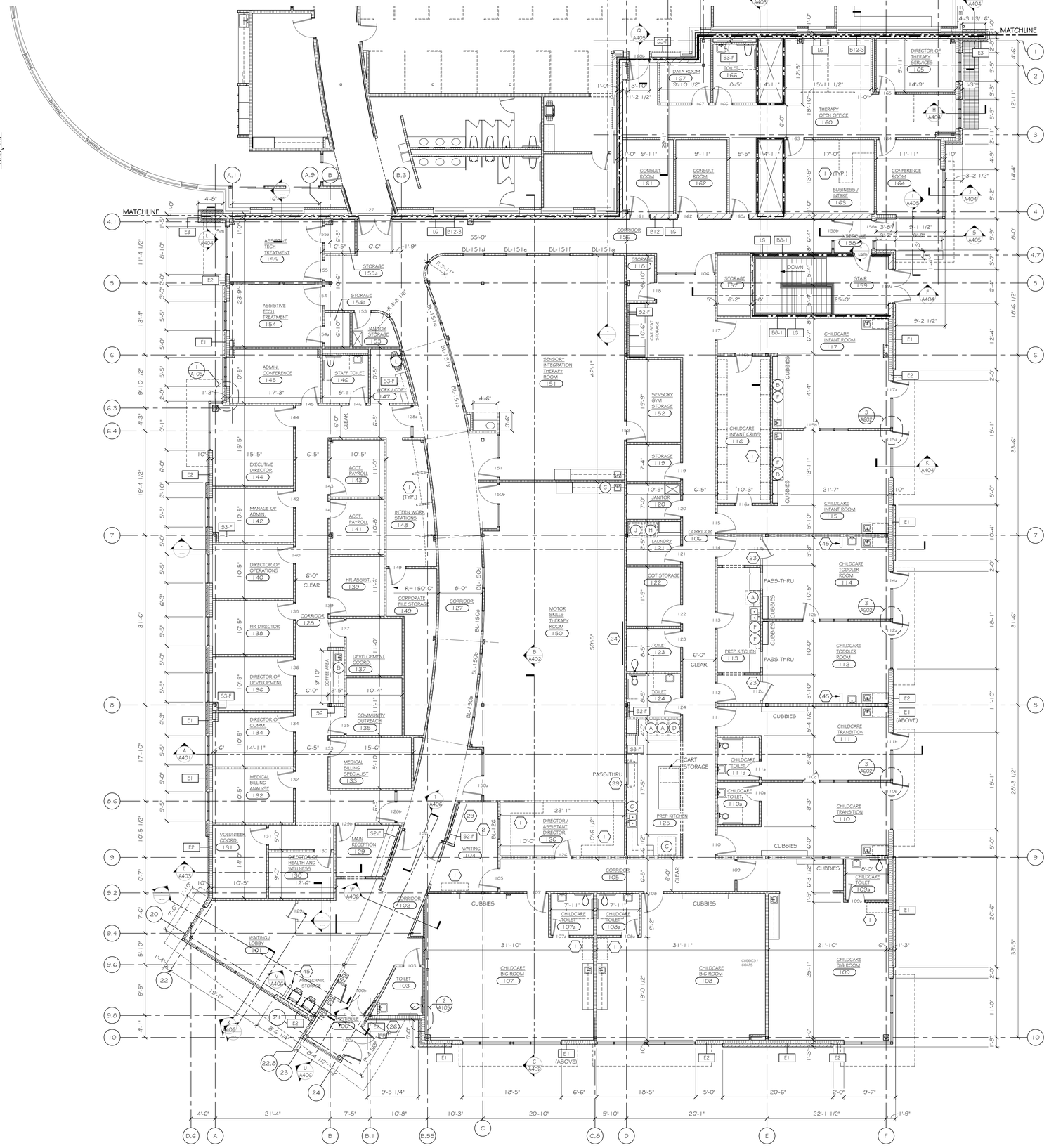

PARTIAL FIRST FLOOR PLAN AREA C
SCALE: 1/8" = 1'-0"

GENERAL NOTES:

A. SEE SHEETS A701 - A702 FOR CASEWORK, TOILET ROOM AND INTERIOR ELEVATIONS.
B. LOCATE INTERIOR MOVEMENT JOINTS IN CMU AND GYPSUM BOARD PER SPECIFICATIONS.
C. SEE EXTERIOR ELEVATION FOR LOCATION OF MOVEMENT JOINTS (M.J.'s) IN EXTERIOR WALL CONSTRUCTION.
D. PROVIDE BLOCKING AT ALL TV, WALL MOUNTED MONITOR AND WALL MOUNTED COMPUTER LOCATIONS.
E. SEE 1/AG01 FOR MINIMUM ADA REQUIRED CLEARANCES AT DOOR WITH CLOSERS.
F. (PB) DENOTES PUSH BUTTON CONTROL FOR POWER DOOR OPERATOR.

PLAN NOTES:

1 DASHED LINES INDICATE FURNITURE / EQUIPMENT PROVIDED BY OWNER.
2 NUMBER INDICATES BORROWED LITE - SEE SHEET AG01.
23 3'-0" PARTIAL HEIGHT WALL
24 4'-0" x 8'-0" MIRROR - VERIFY FINAL LOCATION WITH OWNER.
26 LOCATION OF KNOX BOX.
29 42" STANDING HEIGHT WORK SURFACE / CHECK-IN COUNTER.
39 4'-0" W x 4'-0" H COILING SHUTTER DOOR - SEE 4/AG01.
45 LOWER HEIGHT WALL WITH PLASTIC LAMINATE (PLX) CAP - SEE 3/A105.

PARTITION LEGEND

- EXISTING CONSTRUCTION TO REMAIN
- GYPSUM BOARD ON METAL STUDS AT 16" O.C.
- FACE BRICK
- CMU WALL W/ HORIZ. R/F AT 16" O.C.
- 1 HOUR RATED CONSTRUCTION (U.L. DESIGN NO. UXXX) - SEE WALL TYPES FOR ADDITIONAL INFORMATION.
- 3 HOUR RATED CONSTRUCTION (U.L. DESIGN NO. UXXX) - SEE WALL TYPES FOR ADDITIONAL INFORMATION.

NOTE:
FOR BRACING TOP OF NON-LOAD BEARING WALLS, SEE 1/A102

EQUIPMENT LIST
(EQUIPMENT PROVIDED BY OWNER)

MARK	DESCRIPTION	POWER	DATA	WATER SUPPLY	DRAIN
A	FULL-SIZE REFRIGERATOR	X			
B	UNDER-COUNTER REFRIGERATOR	X			
C	CONVECTION OVEN	X			
D	FULL-SIZE FREEZER	X			
E	UNDER-COUNTER FREEZER	X			
F	MICROWAVE	X			
G	DISHWASHER	X		X	X
H	WASHER	X		X	X
J	DRYER	X			X
K	ADULT CHANGING TABLE	X			
L	COPIER	X	X		

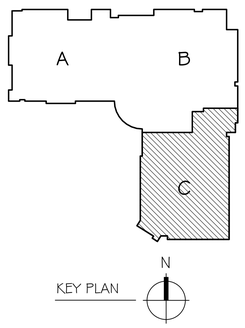

design matters.
somerville architects | engineers
Somerville Inc. | 2100 Riverside Drive, Green Bay, WI 54301-2390
P 920.437.8136 | F 920.437.1131 | www.somervilleinc.com

Revisions | Description | Date

This drawing may not be reproduced without the written permission of Somerville, Inc. This drawing is the property of Somerville, Inc. and may not be used on any other project. Plansqueries@somervilleinc.com
© Somerville, Inc. 2016

PROPOSED ADDITION AND REMODEL
CEREBRAL PALSY, INC.
GREEN BAY, WISCONSIN

Date: 03/14/17
Project No. 6450
Sheet: **A105**

PRELIMINARY
3/13/2017 10:53:12 AM

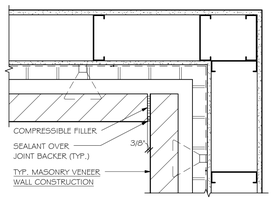

MASONRY VENEER - MOVEMENT JOINT

2 / A301

1 1/2" = 1'-0"

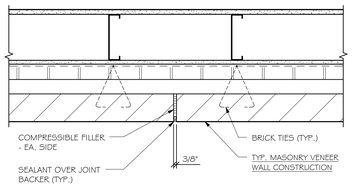

MASONRY VENEER - MOVEMENT JOINT

1 / A301

1 1/2" = 1'-0"

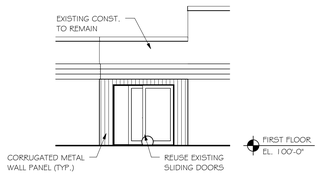

PARTIAL NORTH ELEVATION

SCALE: 1/8" = 1'-0"

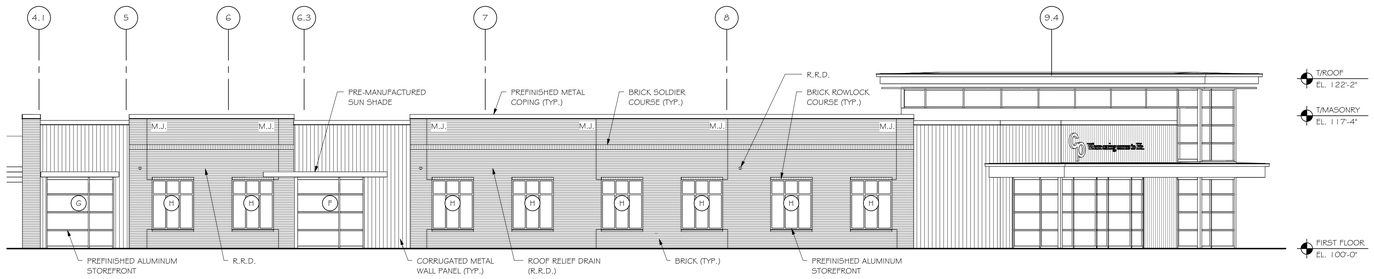

WEST ELEVATION

SCALE: 1/8" = 1'-0"

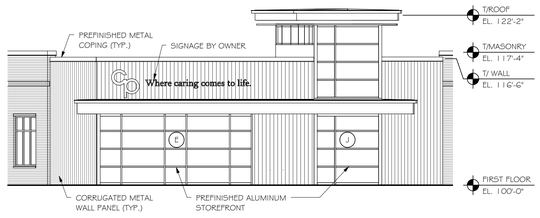

PARTIAL SOUTH ELEVATION

SCALE: 1/8" = 1'-0"

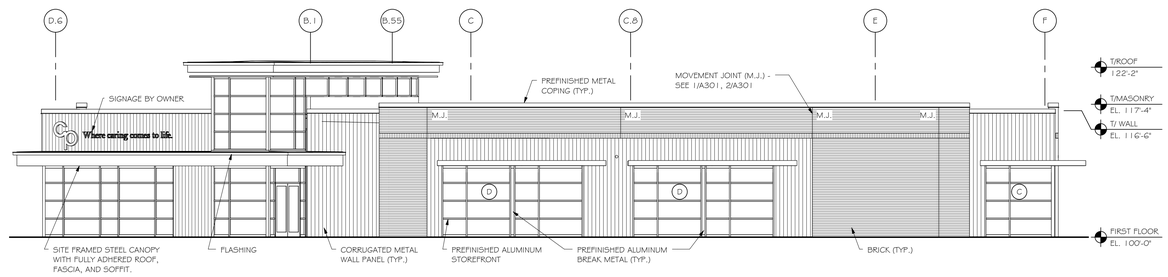

SOUTH ELEVATION

SCALE: 1/8" = 1'-0"

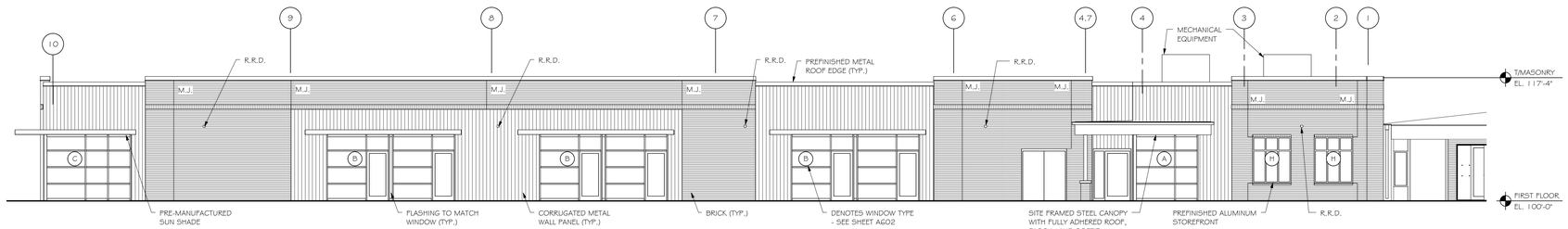

EAST ELEVATION

SCALE: 1/8" = 1'-0"

design matters

somerville
architects | engineers
Somerville Inc. | 2100 Riverside Drive, Green Bay, WI 54301-2390
P 920.437.8136 | F 920.437.1131 | www.somervilleinc.com

Revisions	Description	Date

This drawing may not be reproduced without the written permission of Somerville, Inc. Visual contact with these plans shall constitute prima facie evidence of acceptance of these restrictions.
Permissions@somervilleinc.com
© Somerville, Inc. 2016

PROPOSED ADDITION AND REMODEL
CEREBRAL PALSY, INC.
GREEN BAY, WISCONSIN

Date: 03/14/17
Project No. 6450
Sheet: **A301**

PRELIMINARY
3/13/2017 10:53:14 AM

VIEW FROM SOUTHEAST

VIEW FROM EAST

VIEW FROM EAST (ALONG WAUBENOOR COURT)

VIEW FROM NORTHEAST

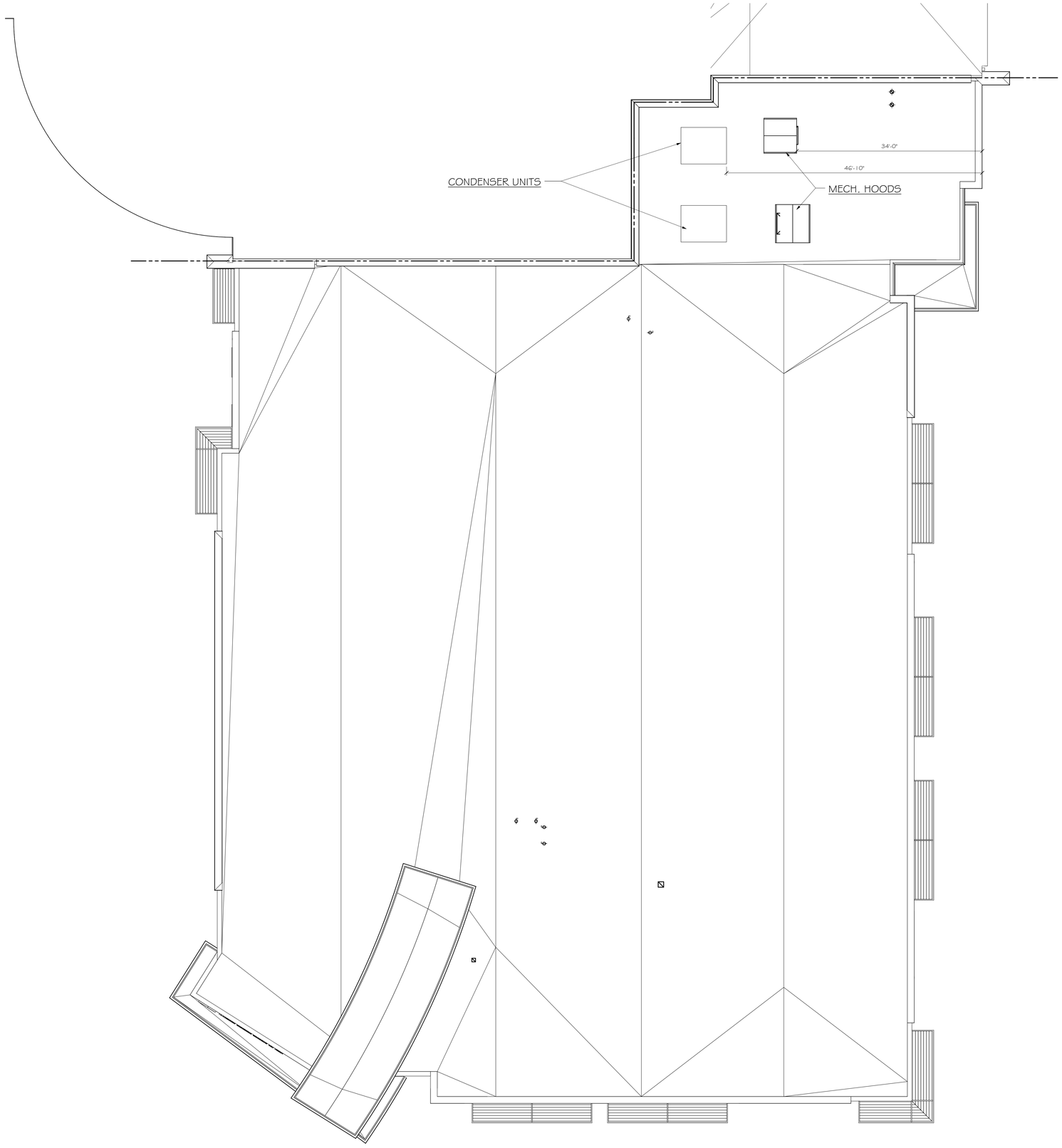

PARTIAL ROOF PLAN
SCALE: 1/8" = 1'-0"

N

PRELIMINARY
3/13/2017 9:23:13 AM

design matters

somerville
architects | engineers

Somerville Inc. | 2100 Riverside Drive, Green Bay, WI 54301-2390
P 920.437.8136 | F 920.437.1131 | www.somervilleinc.com

Revisions	Description	Date

This drawing may not be reproduced without the written permission of Somerville, Inc.
Permission or copies of this drawing may be obtained by emailing
Planrequests@somervilleinc.com
© Somerville, Inc. 2016

PROPOSED ADDITION AND REMODEL
CEREBRAL PALSY, INC.
GREEN BAY, WISCONSIN

Date:
03/14/17
Project No.
6450
Sheet:
SD1

PRELIMINARY
2/10/2017 1:39:36 PM

AERIAL

Date: 02/10/17
Project No. 6450
Sheet

PROPOSED ADDITION AND REMODEL

CEREBRAL PALSY, INC.

GREEN BAY, WISCONSIN

Revisions	Description	Date

This drawing may not be reproduced without the written permission of Somerville, Inc.
Permision or copies of this drawing may be obtained by emailing:
Planrequests@somervilleinc.com
© Somerville, Inc. 2016

somerville architects | engineers
Somerville Inc. | 2100 Riverside Drive, Green Bay, WI 54301-2390
P 920.437.8136 | F 920.437.1131 | www.somervilleinc.com
design matters™